DUVON™

FREEDOM

500W / 600W / 800W

Product Overview

High-output LED lighting system developed for premier tennis and pickleball facilities and other environments requiring advanced glare control. Ideal for competitive play where elevated illumination and visual clarity are critical.

Applications

Sports & Recreation
- Tennis & pickleball courts (**Primary**)
- Golf ranges and more
- General sports facilities

Roadways & Transportation
- Streets, highways & bridges

Industrial & Infrastructure
- Ports, shipyards, airports
- Railyards, freight zones

Performance Highlights

- **High-output config.** for advanced competition requirements
- **Advanced glare-control optics** for superior visual performance
- **Consistent illumination** across multiple adjacent courts
- **Camera-safe, flicker-free** operation
- **Engineered for extended service** life and durability
- **10-year limited manufacturer's warranty**

Engineered, Manufactured & Supported in-House

Duvon™ designs and manufactures complete LED lighting systems and turnkey solutions engineered for predictable performance, long-term reliability, and simplified service. Our systems deliver precision and uniformity across sports, stadium, industrial, and municipal applications.

Specifications

Performance & Environmental Ratings	
Available Beam Angles	Full cut-off / Indirect asymmetric
Operating Temp	-104ºF to 122ºF
Protection Rating	IP65 (IP67 & IP 68 Components)
Rated Life	L70 ≥ 50,000 hrs
Warranty	10 years

Lumen Output	
APL-LHM500N (500W)	65,000 lm
APL-LHM600N (600W)	78,000 lm
APL-LHM800N (800W)	104,000 lm

Construction & Mounting	
Housing Material	Die-cast aluminum
Finish	Outdoor rated powder coating
Color Options	Black / Grey / Green / Custom
Weight	74.36 lbs
Mounting	U-Bracket / Slip fitter (opt.)

Electrical & Control Components	
LED Chips	Nichia
Drivers	Meanwell / Inventronics
Surge Protection	10kV / 20kV (opt.)
Controls	Smart control available (opt.)
EPA	0.75 ft² — 1.45 ft²

Smart Network Lighting Control available upon request.

Comes standard with an internal driver, with optional external driver and customizable driver cabinet.

Example IES files available.

Luminous Intensity Distribution

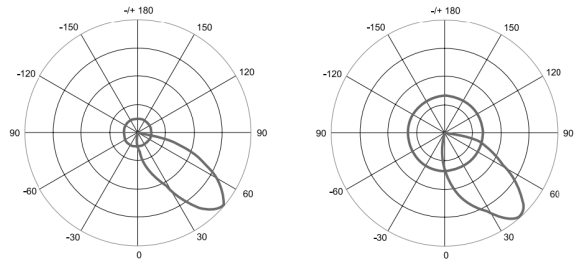

Electrical Data — Input Current (Amps)

(Nominal value shown; actual values may vary by driver configuration...)

Input Voltage	500W	600W	800W
110V	4.54A	5.45A	7.27A
240V	2.08A	2.5A	3.33A
277V	1.81A	2.17A	2.89A
480V	1.04A	1.25A	1.67A

Ordering Information

Select one option from each column to build the model number. Contact Duvon™ for custom options.

Ex: 12 — DV-LHM500N — 500 — Black — 5K — 70 — 100-277V — ADV-R — SC

Qty.	Model No.	Watts	Color	CCT	CRI	Input Power	Accessories	Smart Ctrl (opt.)
	DV-LHM500N	500	Black	3K = 3000K	70	100-277V	ADV-R = G1-S3-ADV-R	SC = Included
	DV-LHM600N	600	Grey	4K = 4000K	80	277-480V	ADV-S = G1-S3-ADV-S	[Blank] = None
	DV-LHM800N	800	Green	5K = 5000K	90			

Standard stock: 5000K CCT | 70 CRI (3000K - 6500K CCT / Other CRI options available).

All technical specifications and datas are subject to modification at any time and without notice.
Contact us for the most up-to-date information or visit www.duvonlighting.com
710 Armstrong Dr, Buffalo Grove, IL 60089 / Phone: (224) 567-8070 / Email: sales@duvonlighting.com

Dimensions

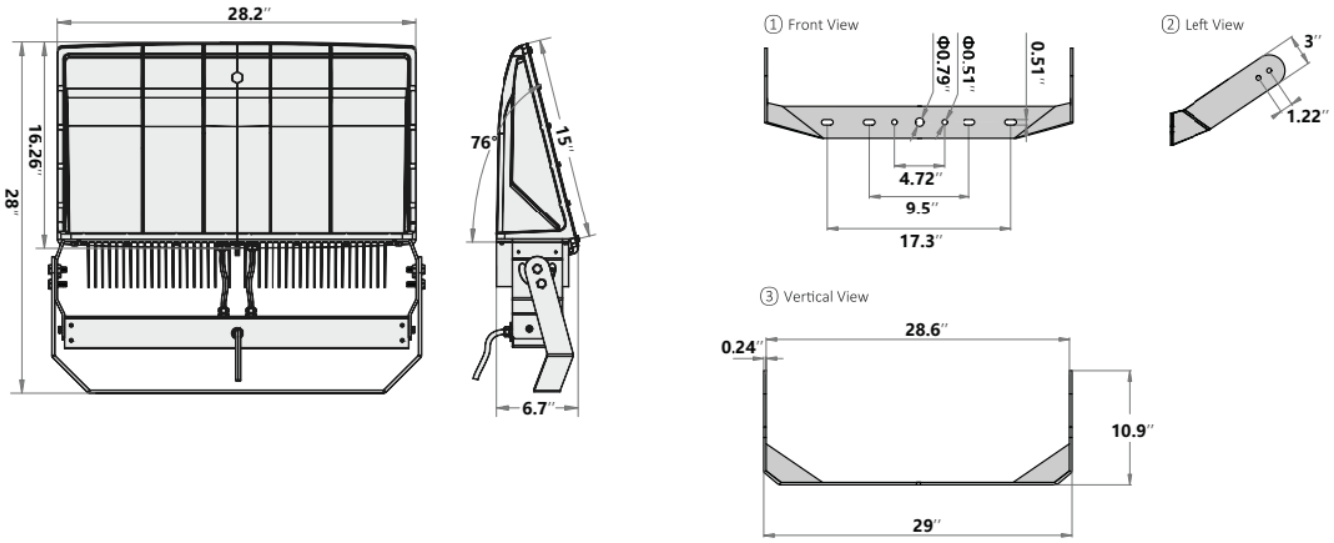

Mounting Accessories

Add accessory part numbers in the ordering information. Slipfitter adapters and arms are customizable.
Standard color: Black (other colors available).

G1-S3-ADV-R

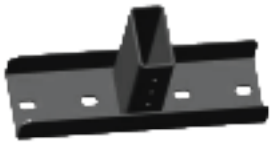

G1-S3-ADV-S

Adjustment Guide

Horizontal installation is recommended for court lighting. Adjustable mounts with tilt angle options are available.
Yoke bracket supports a 180° adjustable tilt.

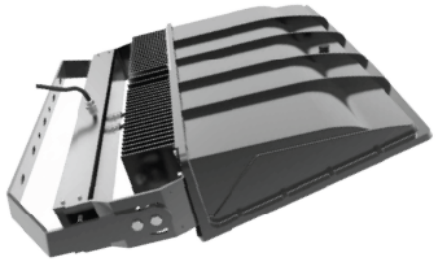

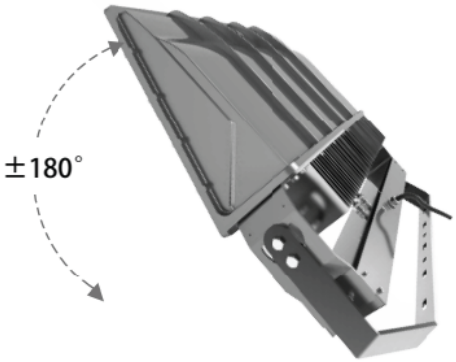

All technical specifications and datas are subject to modification at any time and without notice.
Contact us for the most up-to-date information or visit www.duvonlighting.com
710 Armstrong Dr, Buffalo Grove, IL 60089 / Phone: (224) 567-8070 / Email: sales@duvonlighting.com

① Wireless Zigbee Controller

Versatile Control: Features on/off, dimming, scheduling, and optional clouDV-based monitoring.
Pre-Programmed Switch: Five-button switch with preset dimming for easy operation.
Flexible Connectivity: Compatible with LAN, Wi-Fi, or cellular networks.
Durable Design: Weather-resistant for reliable outdoor use.
Scene Management: Supports Static, Dynamic, and ProFX lighting scenes.

② Wireless DMX Controller

Advanced Control: Includes on/off, dimming, scheduling, scene management, and clouDV-based monitoring.
Mobile App: Easy scene activation and control via Android/iOS devices.
Integrated Display: Real-time system monitoring and configuration updates.
Dynamic RGB: Supports vibrant RGB lighting and customizable scenes.
Reliable Connectivity: Offers cellular and LAN options with interference-free Sub-GHz RF.
Weather-Resistant: Built for harsh outdoor conditions.
Effortless Setup: Simplified commissioning for quick installation.
24/7 Monitoring: Cellular connectivity ensures real-time updates and optimization.

All technical specifications and datas are subject to modification at any time and without notice.
Contact us for the most up-to-date information or visit www.duvonlighting.com
710 Armstrong Dr, Buffalo Grove, IL 60089 / Phone: (224) 567-8070 / Email: sales@duvonlighting.com