DUVON™

LIGHTING THAT PERFORMS

Smarter. Brighter. Stronger.

Duvon™ designs and manufactures complete LED lighting systems engineered for performance, long-term reliability, and simplified service.

Phone: (224) 567-8312
Email: sales@duvonlighting.com
Add: 710 Armstrong Dr, Buffalo Grove, IL 60089

Specifications subject to site conditions and engineering requirements. Additional wattage configurations available upon request. Specifications represent our standard configuration; customization is available. Full spec sheets provided separately.

PRODUCT INDEX

For company background and projects, see pages 6—13

DUVON™

OUTDOOR SPORTS LIGHTING PAGE 14

PATRIOT
PAGE 16

PROCOURT
PAGE 18

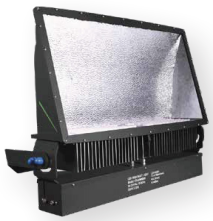

FREEDOM
PAGE 20

LIBERTY
PAGE 22

UNION
PAGE 24

APEX
PAGE 26

VANGUARD
PAGE 28

INDOOR & INDUSTRIAL PAGE 30

FORGE X
PAGE 32

FORGE
PAGE 34

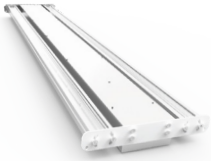

ATLAS
PAGE 36

AREA LIGHTING PAGE 38

LANDMARK
PAGE 40

References on this page link to the corresponding page numbers.

SOLAR SOLUTIONS

For off-grid and solar-powered systems, see the seperate 360 Solar Lighting catalog

360 Solar Lighting™

Through our sister brand, 360 Solar Lighting™, we offer a full range of solar street lights, area lights, bollards, and custom solar lighting systems. Designed for reliable performance in outdoor environments, these solutions enhance safety while supporting long-term sustainability.

View the 360 Solar Lighting catalog, or learn more at 360solarlighting.com

While Duvon™ specializes in high-performance, grid-powered LED solutions for sports, commercial, and infrastructure projects, 360 Solar Lighting™ operates as a fully independent brand dedicated exclusively to solar-powered systems.

With its own product lineup, engineering approach, and catalog, 360 Solar Lighting goes beyond a branding—delivering self-sustaining lighting solutions designed specifically for off-grid, hybrid, and renewable applications.

References on this page link to the 360 Solar Lighting™ catalog and website.

DUVON™

ABOUT US

With a combined 30 years of lighting experience, we lead the industry in precision-engineered lighting systems tailored for court-specific applications.

Our approach emphasizes value engineering, lighting uniformity and ball flight visibility to ensure a high-quality playing experience.

VIEW MORE PROJECTS AT
DUVONLIGHTING.COM

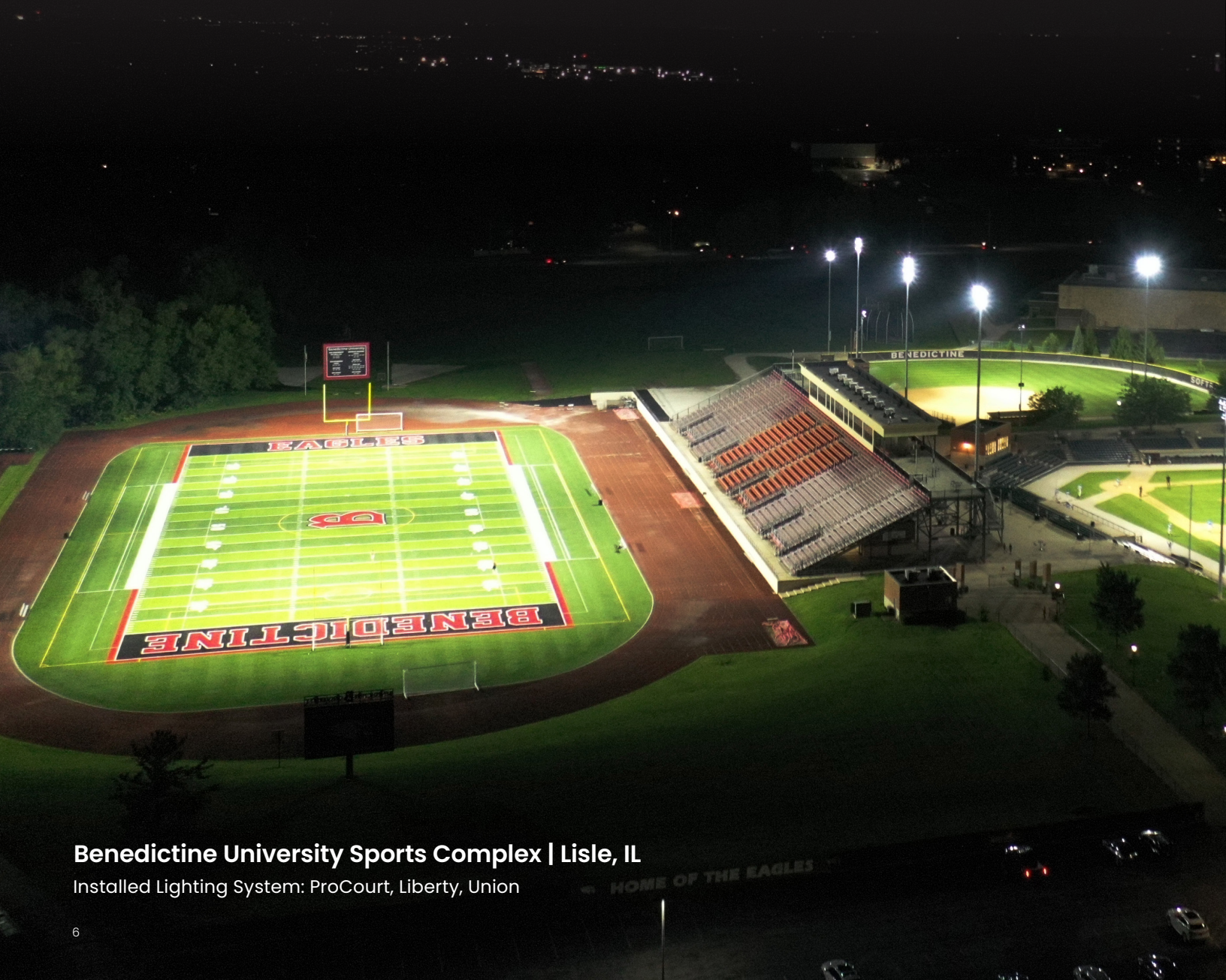

Benedictine University Sports Complex | Lisle, IL

Installed Lighting System: ProCourt, Liberty, Union

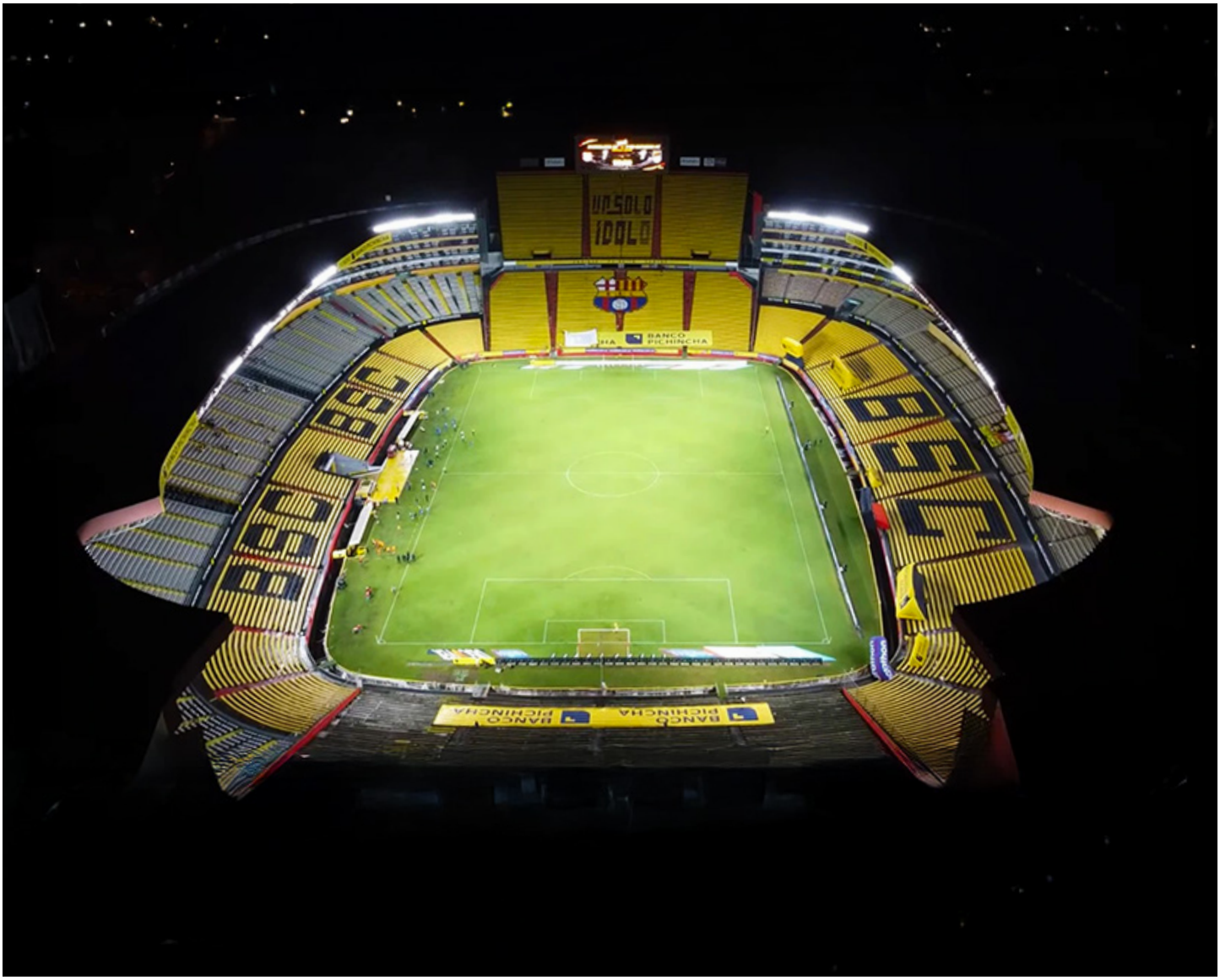

Estadio Monumental Banco Pichincha | Guayaquil, Ecuador

Installed Lighting System: Liberty

Berkeley Tennis Club | Berkley, CA

Installed Lighting System: ProCourt

GLOBAL MARKET & SALES

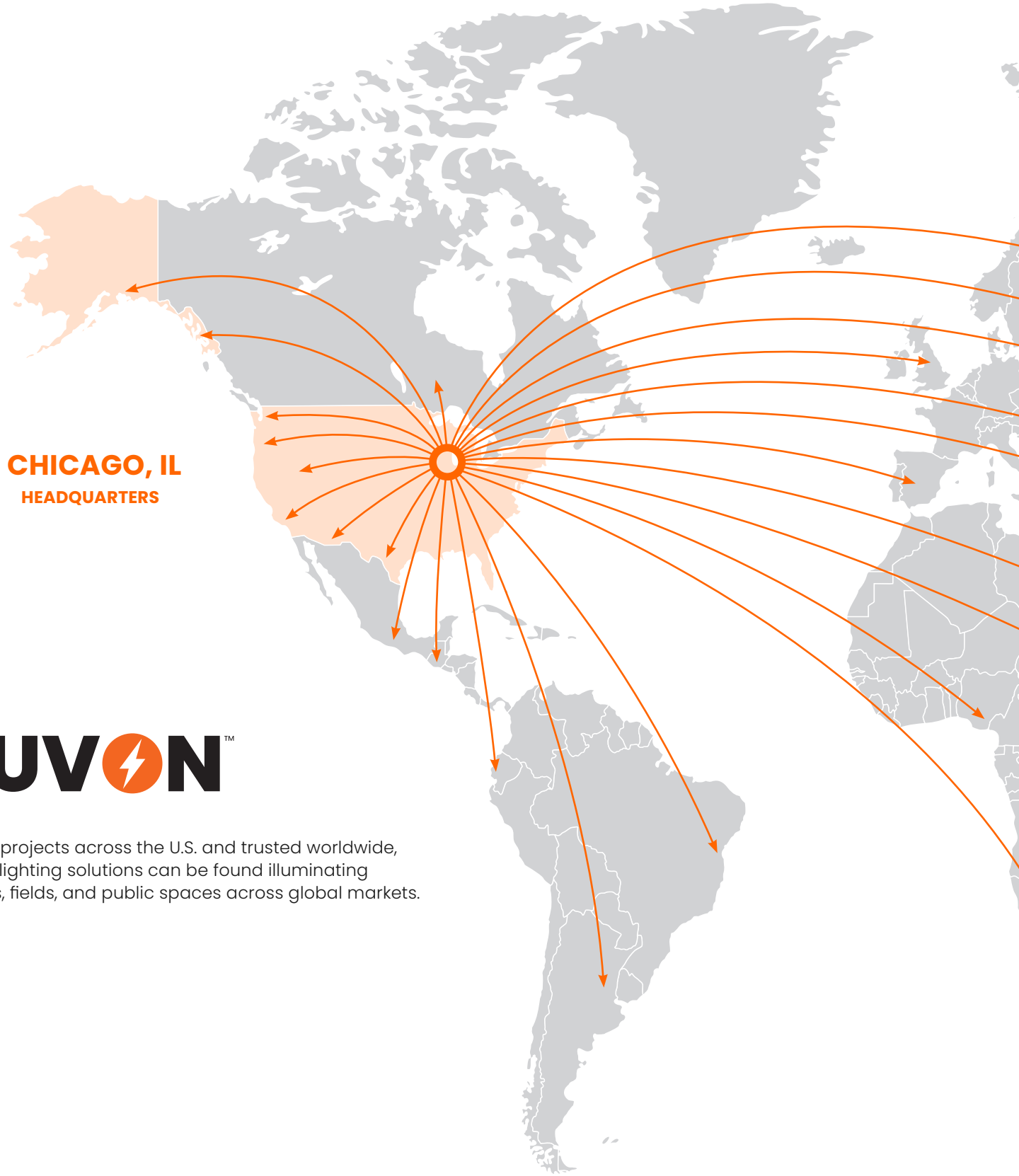

DUVON™

Built for projects across the U.S. and trusted worldwide, Duvon™ lighting solutions can be found illuminating facilities, fields, and public spaces across global markets.

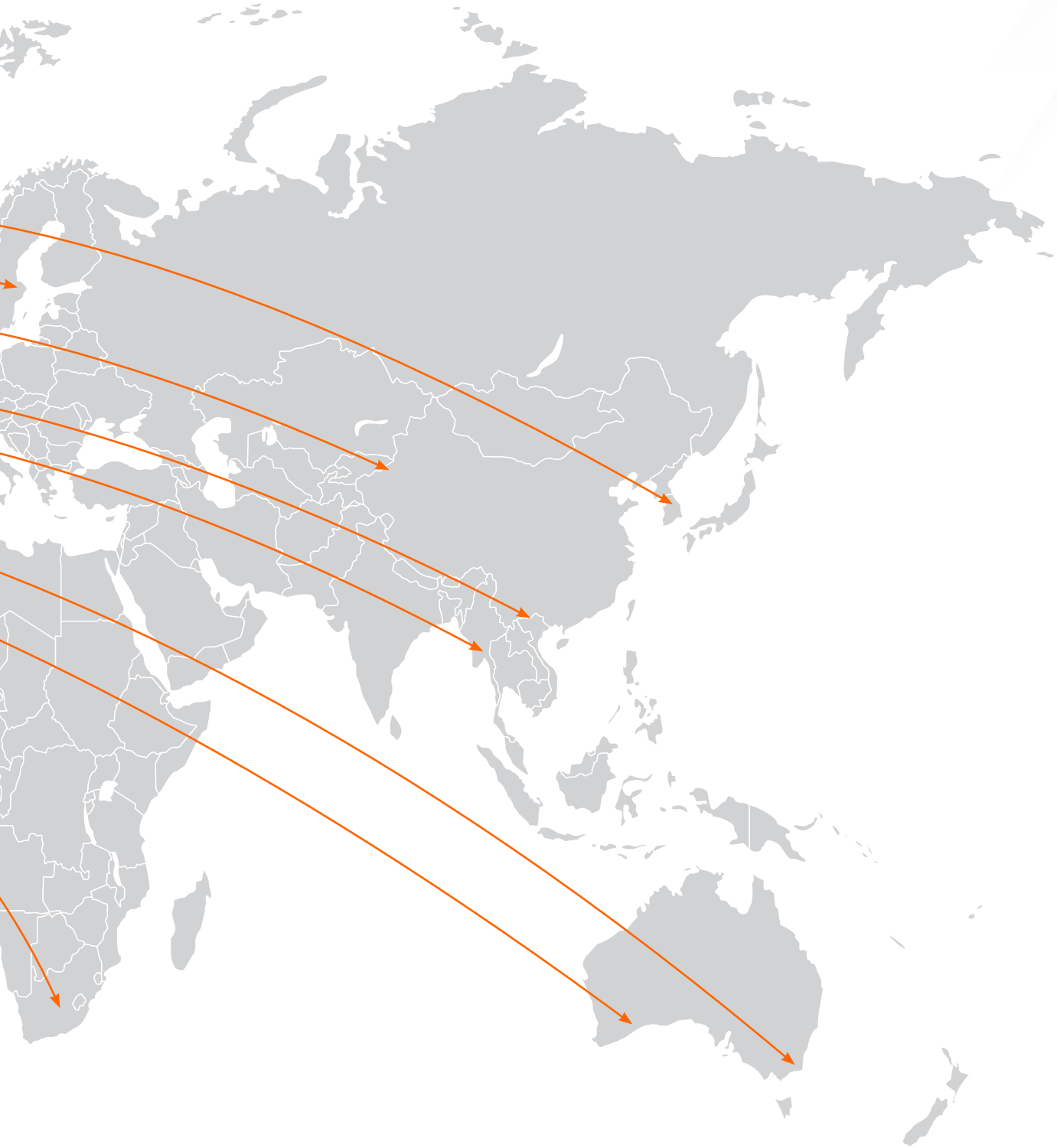

SECTION 01

OUTDOOR SPORTS LIGHTING

Banolo
Claro

FELLOWSHIP
PALADINS

- ZERO UPLIGHT
- GLARE FREE
- NO SPILL

DUVON DARK SKY COMPLIANT

10 YEAR WARRANTY

PATRIOT

COMPACT POWER

Purpose-built LED lighting system for recreational tennis and pickleball courts and other general outdoor applications. Engineered to deliver consistent illumination, controlled glare, and dependable long-term performance for clubs, HOAs, and community facilities.

- **Application-specific optics** optimized for court geometries
- **Balanced horizontal and vertical** uniformity for player comfort
- **Full cut-off optical design** to control glare and light spill
- **Flicker-free operation** suitable for recreational play
- **Robust electrical design** with wide voltage compatibility

LUMINOUS INTENSITY DISTRIBUTION (LID)

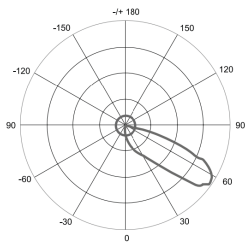

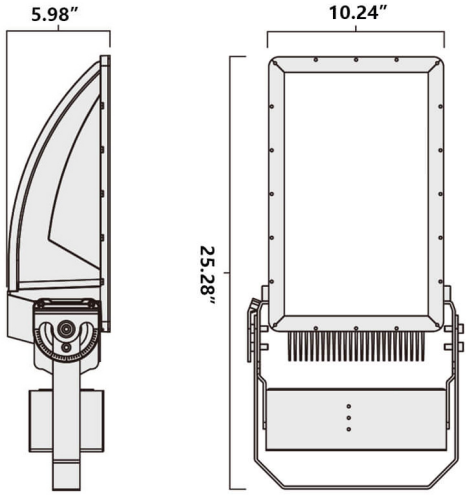

COLOR OPTIONS

BLACK | GREY | GREEN

KEY FEATURES

OPTICS

Our indirect asymmetric lighting distribution is uniquely designed to reduce glare while controlling overflow using indirect LED lighting technology.

REFLECTOR

Internal indirect reflector has a high reflectivity of 98%. Our V series reflector uses the latest PVD technology.

EFFICIENCY

3000K — 120 lumens per watt
4000K — 125 lumens per watt
5000K — 130 lumens per watt

WEATHERPROOF HOUSING

Die cast aluminum housing minimizes wind load. Corrosion resistant powder coated weatherproof inside and out. 5mm tempered glass lens.

MOUNTING

Standard U-Bracket. Pipe slip fitter and yolk mounts are available upon request and will require MOQ. Custom mounting options can be made.

SURGE PROTECTION

Built-in 10kV surge protection module used to prevent fixture damage in the event of an excessive voltage surge. Optional 20kV protection available.

FIXTURE 0% ULOR DIAGRAM

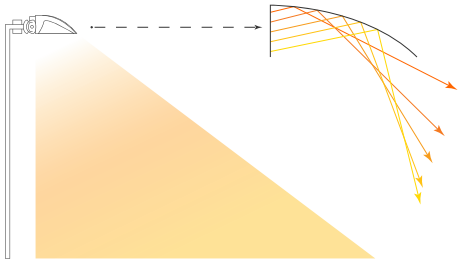

REPLACEMENT

100W LED = 250W HID / MH / HPS
150W LED = 400W HID / MH / HPS
200W LED = 500W HID / MH / HPS

ELECTRIC SYSTEM

Class I system
Total harmonic distortion: <20%
Power Factor: >0.9

Std. Input Voltage:
100-277VAC, 50/60Hz

Opt. High Voltage:
277-480VAC, 50/60Hz

IP65

MODEL NUMBER	DV-LHM100N	DV-LHM150N	DV-LHM200N
SYSTEM WATTAGE	100W	150W	200W
LPW	130-140LM/W		
LUMEN OUTPUT @5K	13,00LM	19,500LM	26,000LM
LED LIGHT SOURCE	OSRAM		
DRIVER	INVENTRONICS		
CRI	70 / 80 / 90		
OPERATING TEMP	-104°F to 122°F		
IP RATING	IP65 / IP66		
SURGE PROTECTOR	10kV / 20kV		
LIFE TIME	50,000 hours		
CCT	2,700K-7,000K		
WEIGHT	23.54 lbs	23.76 lbs	23.98 lbs

Specifications reflect standard models. Custom options may vary.
Contact Duvon™ lighting for additional solutions.

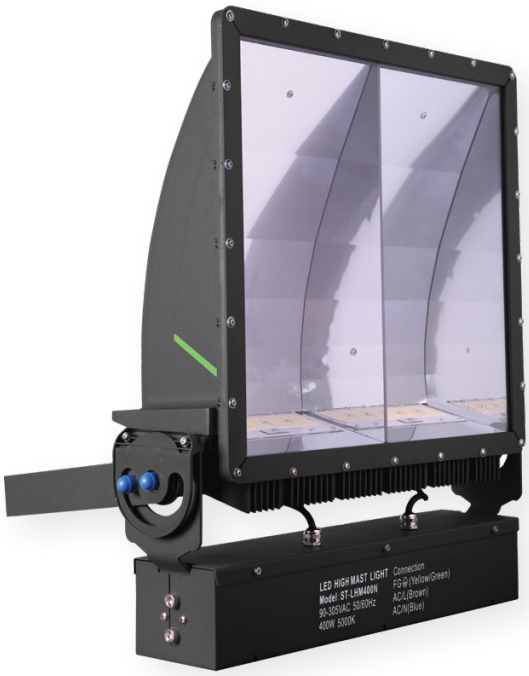

- ZERO UPLIGHT
- GLARE FREE
- NO SPILL

DUVON DARK SKY COMPLIANT

10 YEAR WARRANTY

PROCOURT

BUILT FOR MATCH PLAY

Professional-grade LED lighting solution for clubs, schools, multi-court complexes, and glare-sensitive applications such as airports, seaports, and large-area facilities. Designed to support higher illumination levels while preserving visual comfort and performance.

- **Increased lumen output** for competitive + multi-use applications
- **Precision asymmetric optics** for perimeter and offset pole layouts
- **Reduced glare zones** to support prolonged visual tasks
- **Dark Sky compliant, full cut-off** optical control
- **Heavy-duty** die-cast aluminum construction

LUMINOUS INTENSITY DISTRIBUTION (LID)

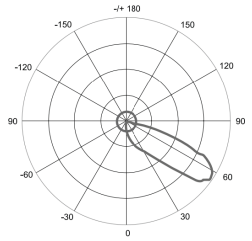

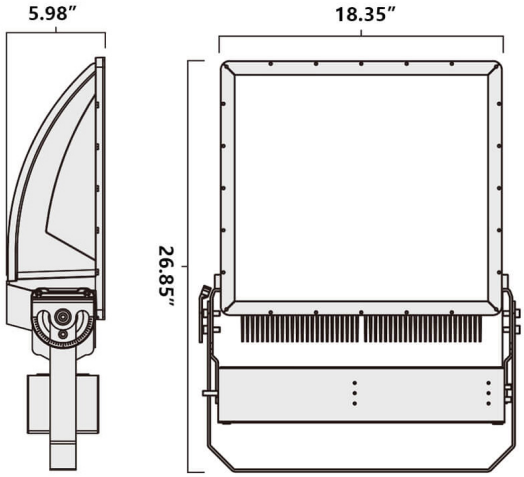

COLOR OPTIONS

BLACK | GREY | GREEN

KEY FEATURES

OPTICS

Our asymmetric lighting distribution is uniquely designed to reduce glare while controlling overflow using indirect LED lighting technology.

REFLECTOR

Internal indirect reflector has a high reflectivity of 98%. Our V series reflector uses the latest PVD technology.

EFFICIENCY

3000K — 120 lumens per watt
4000K — 125 lumens per watt
5000K — 130 lumens per watt

WEATHERPROOF HOUSING

Die cast aluminum housing minimizes wind load. Corrosion resistant powder coated weatherproof inside and out. 5mm tempered glass lens.

MOUNTING

Standard U-Bracket. Pipe slip fitter and yolk mounts are available upon request and will require MOQ. Custom mounting options can be made.

SURGE PROTECTION

Built-in 10kV surge protection module used to prevent fixture damage in the event of an excessive voltage surge. Optional 20kV protection available.

FIXTURE 0% ULOR DIAGRAM

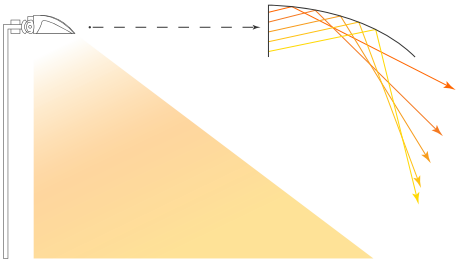

REPLACEMENT

300W LED = 800W HID / MH / HPS
400W LED = 1000W HID / MH / HPS

ELECTRIC SYSTEM

Class I system
Total harmonic distortion: <20%
Power Factor: >0.9

Std. Input Voltage:
100-277VAC, 50/60Hz

Opt. High Voltage:
277-480VAC, 50/60Hz

IP65

MODEL NUMBER	DV-LHM300N	DV-LHM400N
SYSTEM WATTAGE	300W	400W
LPW	130-140LM/W	
LUMEN OUTPUT @5K	39,000LM	52,000LM
LED LIGHT SOURCE	OSRAM	
DRIVER	INVENTRONICS	
CRI	70 / 80 / 90	
OPERATING TEMP	-104°F to 122°F	
IP RATING	IP65 / IP66	
SURGE PROTECTOR	10kV / 20kV	
LIFE TIME	L70 ≥ 50,000 hrs	
CCT	2,700K-7,000K	
WEIGHT	42.9 lbs	47.3 lbs

Specifications reflect standard models. Custom options may vary.
Contact Duvon™ lighting for additional solutions.

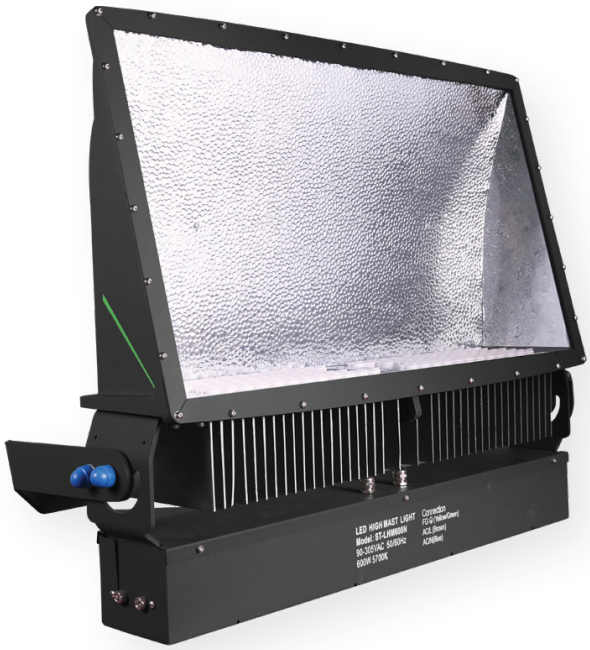

- ZERO UPLIGHT
- GLARE FREE
- NO SPILL

DUVON DARK SKY COMPLIANT

10 YEAR WARRANTY

FREEDOM

HIGH-OUTPUT SYSTEM

High-output LED lighting system developed for premier tennis and pickleball facilities and other environments requiring advanced glare control. Ideal for competitive play where illumination and visual clarity are critical.

- **High-output** configuration for advanced competition requirements
- **Advanced glare-control optics** for superior visual performance
- **Consistent illumination** across multiple adjacent courts
- **Flicker-free** output suitable for video and streaming
- **Engineered for extended service life and durability**

LUMINOUS INTENSITY DISTRIBUTION (LID)

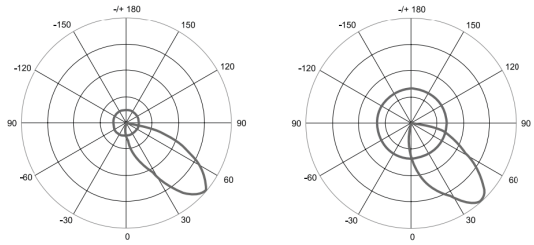

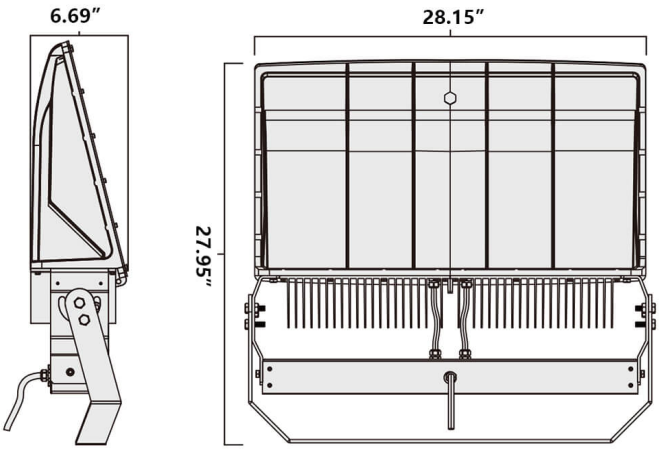

COLOR OPTIONS

BLACK | GREY | GREEN

KEY FEATURES

OPTICS

Our asymmetric lighting distribution is uniquely designed to reduce glare while controlling overflow using indirect LED lighting technology.

REFLECTOR

Internal indirect reflector has a high reflectivity of 98%. Our V series reflector uses the latest PVD technology.

EFFICIENCY

3000K — 120 lumens per watt
4000K — 125 lumens per watt
5000K — 130 lumens per watt

WEATHERPROOF HOUSING

Die cast aluminum housing minimizes wind load. Corrosion resistant powder coated weatherproof inside and out. 5mm tempered glass lens.

MOUNTING

Standard U-Bracket. Pipe slip fitter and yolk mounts are available upon request and will require MOQ. Custom mounting options can be made.

SURGE PROTECTION

Built-in 10kV surge protection module used to prevent fixture damage in the event of an excessive voltage surge. Optional 20kV protection available.

FIXTURE 0% ULOR DIAGRAM

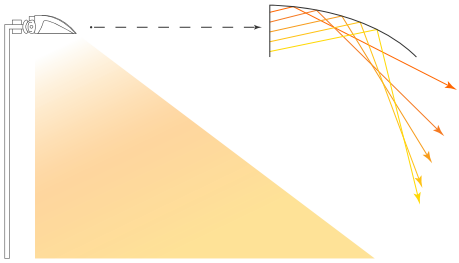

REPLACEMENT

500W LED = 1200W HID / MH / HPS
600W LED = 1500W HID / MH / HPS
800W LED = 2000W HID / MH / HPS

ELECTRIC SYSTEM

Class I system
Total harmonic distortion: <20%
Power Factor: >0.9

Std. Input Voltage:
100-277VAC, 50/60Hz

Opt. High Voltage:
277-480VAC, 50/60Hz

IP65

MODEL NUMBER	DV-LHM500N	DV-LHM600N	DV-LHM800N
SYSTEM WATTAGE	500W	600W	800W
LPW	130-140LM/W		
LUMEN OUTPUT @5K	65,000LM	78,000LM	104,000LM
LED LIGHT SOURCE	OSRAM		
DRIVER	INVENTRONICS		
CRI	70 / 80 / 90		
OPERATING TEMP	-104°F to 122°F		
IP RATING	IP65 / IP66		
SURGE PROTECTOR	10kV / 20kV		
LIFE TIME	L70 ≥ 50,000 hrs		
CCT	2,700K-7,000K		
WEIGHT	70.4 lbs	74.25 lbs	74.36 lbs

Specifications reflect standard models. Custom options may vary.
Contact Duvon™ lighting for additional solutions.

- ZERO UPLIGHT
- GLARE FREE
- NO SPILL

DUVON DARK SKY COMPLIANT

10 YEAR WARRANTY

LIBERTY

ROBUST VERSATILITY

Versatile LED field lighting system engineered for schools, parks, and municipal athletic facilities. Designed to balance performance, energy efficiency, and long-term serviceability across multi-sport outdoor applications. Visors longer than 8" are Dark Sky compliant.

- **Flexible optical distributions** for varied field sizes and layouts
- **Reliable uniformity** for recreational and scholastic sports
- **Multi-optical solutions** to minimize neighborhood light impact
- **Integrated surge protection** options for municipal reliability
- **Unique hollow design** — lightweight, very low EPA

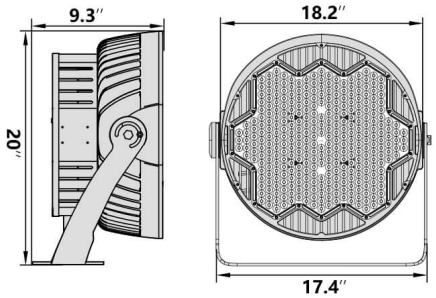

LID (15° / 25° / 45°)

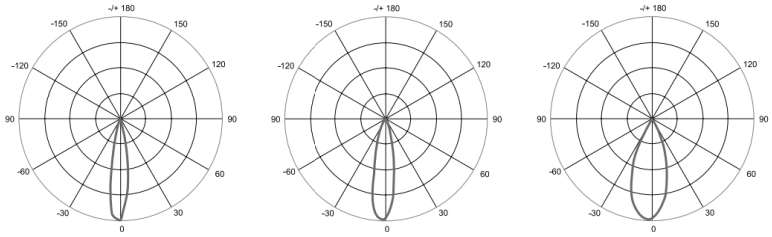

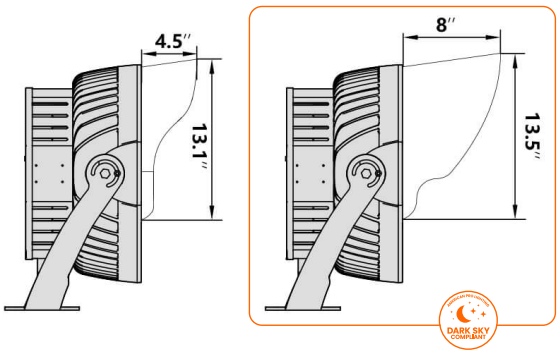

COLOR OPTIONS

BLACK | GREY

KEY FEATURES

OPTICS

High quality PC lens, UV resistance. Single PCB board design for better glare control with our quality Lens.

LEDS

Nichia / Osram LED chips with superior stability for long life span 100,000 hours, high density LM80.

DRIVER

Meanwell / Inventronics LED drivers designed for ultra-high efficiency, high voltage, thermal protection.

WEATHERPROOF HOUSING

Die cast aluminum housing minimizes wind load. Corrosion resistant powder coated weatherproof inside and out. 5mm tempered glass lens.

MOUNTING

Standard U-Bracket. Pipe slip fitter and yolk mounts are available upon request and will require MOQ. Custom mounting options can be made.

SURGE PROTECTION

Built-in 10kV surge protection module used to prevent fixture damage in the event of an excessive voltage surge. Optional 20kV protection available.

BEAM ANGLES

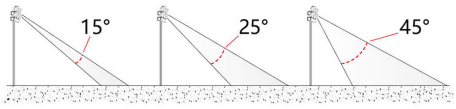

REPLACEMENT

500W LED = 1000W HID / MH / HPS
600W LED = 1200W HID / MH / HPS
800W LED = 1500W HID / MH / HPS
1000W LED = 2000W HID / MH / HPS
1200W LED = 2000W HID / MH / HPS

OTHER DETAILS

Class I system
Total harmonic distortion: <20%
Power Factor: >0.9

Std. Input Voltage:
100-277VAC, 50/60Hz

Opt. High Voltage:
277-480VAC, 50/60Hz

IP65

MODEL NUMBER		DV-RSL800N	DV-RSL1000N	DV-RSL1200N
SYSTEM WATTAGE		800W	1000W	1200W
LPW		120LM/W		
LUMEN OUTPUT @5K		96,000LM	12,000LM	144,000LM
LED LIGHT SOURCE		OSRAM		
DRIVER		INVENTRONICS		
CRI		70 / 80 / 90		
OPERATING TEMP		-104°F to 122°F		
IP RATING		IP65 / IP66		
SURGE PROTECTOR		10kV / 20kV		
LIFE TIME		L70 ≥ 50,000 hrs		
CCT		2,700K-7,000K		
WEIGHT	REMOTE DRIVER INTEGRATED DRIVER	53 lbs 71.6 lbs	63.13 lbs 78.87 lbs	53.46 lbs 79.2 lbs

Specifications reflect standard models. Custom options may vary.
Contact Duvon™ lighting for additional solutions.

UNION

VALUE STADIUM SOLUTION

Cost-effective LED stadium lighting system designed for large school and municipal sports venues. Engineered to provide reliable coverage, controlled glare, and durable performance upgrade for field lighting systems.

- **Medium to long range throw** optical distributions for stadiums
- **Reliable performance** suitable for moderate-height pole installs
- **Controlled glare** for players, officials, and spectator viewing areas
- **High-efficiency system** optimized for value-oriented projects
- **Unique hollow design** — lightweight, very low EPA

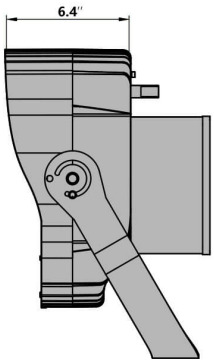

LID (25° / 45° / 60°)

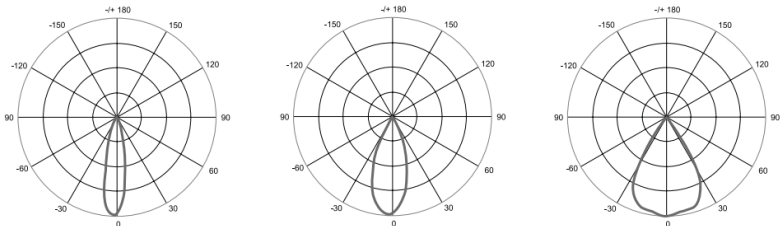

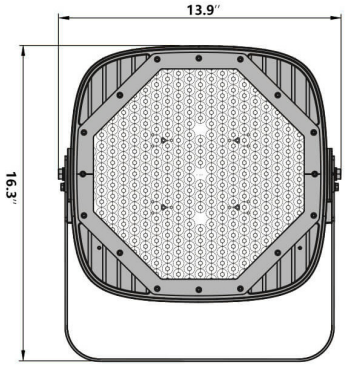

COLOR OPTIONS

BLACK | GREY

KEY FEATURES

OPTICS

High quality PC lens, UV resistance. Single PCB board design for better glare control with our quality Lens.

LEDS

Nichia / Osram LED chips with superior stability for long life span 100,000 hours, high density LM80.

DRIVER

Meanwell / Inventronics LED drivers designed for ultra-high efficiency, high voltage, thermal protection.

WEATHERPROOF HOUSING

Die cast aluminum housing minimizes wind load. Corrosion resistant powder coated weatherproof inside and out. 5mm tempered glass lens.

MOUNTING

Standard U-Bracket. Pipe slip fitter and yolk mounts are available upon request and will require MOQ. Custom mounting options can be made.

SURGE PROTECTION

Built-in 10kV surge protection module used to prevent fixture damage in the event of an excessive voltage surge. Optional 20kV protection available.

BEAM ANGLES

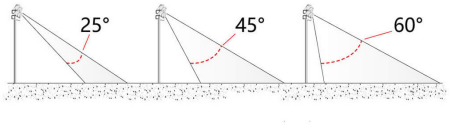

REPLACEMENT

300W LED = 800W HID / MH / HPS
400W LED = 1000W HID / MH / HPS
500W LED = 1200W HID / MH / HPS
600W LED = 1500W HID / MH / HPS

OTHER DETAILS

Class I system
Total harmonic distortion: <20%
Power Factor: >0.9

Std. Input Voltage:
100-277VAC, 50/60Hz

Opt. High Voltage:
277-480VAC, 50/60Hz

IP65

MODEL NUMBER		DV-RSL300S	DV-RSL400S	DV-RSL500S	DV-RSL600S
SYSTEM WATTAGE		300W	400W	500W	600W
LPW		120LM/W			
LUMEN OUTPUT @5K		36,000LM	48,000LM	60,000LM	72,000LM
LED LIGHT SOURCE		OSRAM			
DRIVER		INVENTRONICS			
CRI		70 / 80 / 90			
OPERATING TEMP		-104°F to 122°F			
IP RATING		IP65 / IP66			
SURGE PROTECTOR		10kV / 20kV			
LIFE TIME		L70 ≥ 50,000 hrs			
CCT		2,700K-7,000K			
WEIGHT	REMOTE DRIVER INTEGRATED DRIVER	20.9 lbs 27.5 lbs	20.9 lbs 27.9 lbs	20.9 lbs 34.1 lbs	20.9 lbs 34.1 lbs

Specifications reflect standard models. Custom options may vary.
Contact Duvon™ lighting for additional solutions.

APEX

BIG STAGE POWER

Advanced LED stadium lighting solution for competitive sports facilities. Optimized for higher performance requirements, operational flexibility, and scalable long-term system ownership. Engineered to provide reliable performance upgrade.

- **High-output** configurations for large venues
- **Narrow-to-wide** beam options for precise control
- **Fixture-level control** compatibility for flexible operation
- **Flicker-free** output suitable for video and streaming
- **Unique hollow design** — lightweight, very low EPA

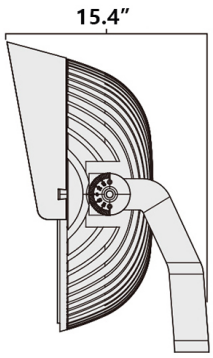

LID (15° / 25°)

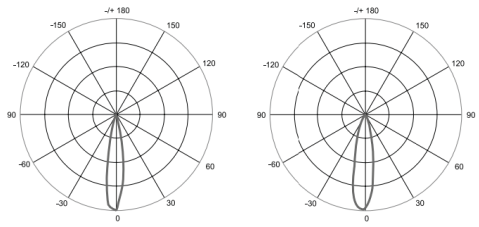

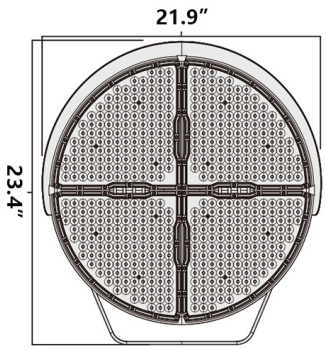

COLOR OPTIONS

BLACK | GREY

KEY FEATURES

OPTICS

High quality PC lens, UV resistance. Single PCB board design for better glare control with our quality Lens.

LEDS

Nichia / Osram LED chips with superior stability for long life span 100,000 hours, high density LM80.

DRIVER

Meanwell / Inventronics LED drivers designed for ultra-high efficiency, high voltage, thermal protection.

WEATHERPROOF HOUSING

Die cast aluminum housing minimizes wind load. Corrosion resistant powder coated weatherproof inside and out. 5mm tempered glass lens.

MOUNTING

Standard U-Bracket. Pipe slip fitter and yolk mounts are available upon request and will require MOQ. Custom mounting options can be made.

SURGE PROTECTION

Built-in 10kV surge protection module used to prevent fixture damage in the event of an excessive voltage surge. Optional 20kV protection available.

BEAM ANGLES

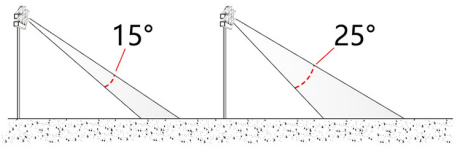

REPLACEMENT

1200W LED = 800W HID / MH / HPS
1300W LED = 1000W HID / MH / HPS
1400W LED = 1200W HID / MH / HPS
1500W LED = 1500W HID / MH / HPS
1600W LED = 1500W HID / MH / HPS

OTHER DETAILS

Class I system
Total harmonic distortion: <20%
Power Factor: >0.9

Std. Input Voltage:
100-277VAC, 50/60Hz

Opt. High Voltage:
277-480VAC, 50/60Hz

IP65

MODEL NUMBER		DV-RSL1200N	DV-RSL1300N	DV-RSL1400N	DV-RSL1500N	DV-RSL1600N
SYSTEM WATTAGE		1200W	1300W	1400W	1500W	1600W
LPW		135LM/W				
LUMEN OUTPUT @5K		162,000LM	175,500LM	189,000LM	202,500LM	216,000LM
LED LIGHT SOURCE		OSRAM				
DRIVER		INVENTRONICS				
CRI		70 / 80 / 90				
OPERATING TEMP		-104°F to 122°F				
IP RATING		IP65 / IP66				
SURGE PROTECTOR		10kV / 20kV				
LIFE TIME		L70 ≥ 50,000 hrs				
CCT		2,700K-7,000K				
WEIGHT	REMOTE DRIVER INTEGRATED DRIVER	52.8 lbs 63.8 lbs	53 lbs 66 lbs	53 lbs 71.6 lbs	63.13 lbs 78.87 lbs	53.46 lbs 79.2 lbs

Specifications reflect standard models. Custom options may vary.
Contact Duvon™ lighting for additional solutions.

Single: 300W
to 400W

- ZERO UPLIGHT
- GLARE FREE
- NO SPILL

DUVON DARK SKY COMPLIANT

10 YEAR WARRANTY

VANGUARD

STADIUM DOMINANCE

Elite, broadcast-grade LED stadium lighting system engineered for NCAA, collegiate, and professional venues. Designed to deliver precise illumination, visual consistency, and long-term performance with its unique hollow design for perfect heat dissipation.

- **Flicker-free** output suitable for video and streaming
- **Optimized horizontal and vertical** illumination for televised events
- **Precision long-throw optics** for large-scale fields
- **Independent fixture-level** dimming and control capability
- **Engineered for high-wind** and high-mast applications — low EPA

Double: 500W to 800W | Triple: 1000W to 1200W | Quad: 1300W to 1600W

LID (6° / 15° / 25° / 45°)

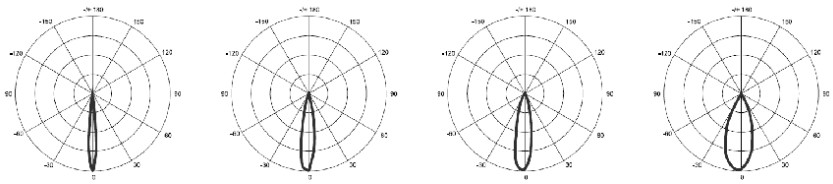

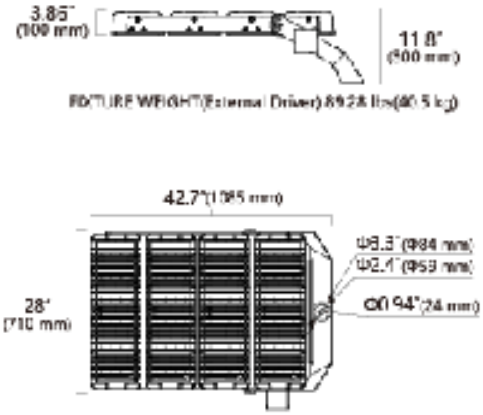

COLOR OPTIONS

BLACK | GREY

KEY FEATURES

OPTICS

Our asymmetric lighting distribution is uniquely designed to reduce glare while controlling overflow using indirect LED lighting technology.

LEDS

Nichia / Osram LED chips with superior stability for long life span 100,000 hours, high density LM80.

DRIVER

Meanwell / Inventronics LED drivers designed for ultra-high efficiency, high voltage, thermal protection.

WEATHERPROOF HOUSING

Die cast aluminum housing minimizes wind load. Corrosion resistant powder coated weatherproof inside and out. 5mm tempered glass lens.

MOUNTING

Standard U-Bracket. Pipe slip fitter and yolk mounts are available upon request and will require MOQ. Custom mounting options can be made.

SURGE PROTECTION

Built-in 10kV surge protection module used to prevent fixture damage in the event of an excessive voltage surge. Optional 20kV protection available.

BEAM ANGLES

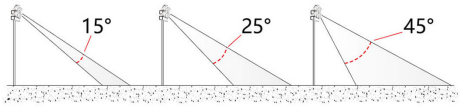

REPLACEMENT

1200W LED = 1500W HID / MH / HPS
1300W LED = 1500W HID / MH / HPS
1400W LED = 1500W HID / MH / HPS
1500W LED = 1500W HID / MH / HPS
1600W LED = 1500W HID / MH / HPS

ELECTRICAL SYSTEM

Class I system
Total harmonic distortion: <20%
Power Factor: >0.9

Std. Input Voltage:
100-277VAC, 50/60Hz

Opt. High Voltage:
277-480VAC, 50/60Hz

IP65

MODEL NUMBER	DV-RSL1200N	DV-RSL1300N	DV-RSL1400N	DV-RSL1500N	DV-RSL1600N
SYSTEM WATTAGE	1200W	1300W	1400W	1500W	1600W
LPW	160LM/W				
LUMEN OUTPUT @5K	36,000LM	72,000LM	96,000LM	144,500LM	168,000LM
LED LIGHT SOURCE	OSRAM				
DRIVER	INVENTRONICS				
CRI	70 / 80 / 90				
OPERATING TEMP	-104°F to 122°F				
IP RATING	IP65 / IP66				
SURGE PROTECTOR	10kV / 20kV				
LIFE TIME	L70 ≥ 50,000 hrs				
CCT	2,700K-7,000K				
WEIGHT	38.58 lbs	45.19 lbs	45.19 lbs	71.65 lbs	89.28 lbs

Specifications reflect standard models. Custom options may vary.
Contact Duvon™ lighting for additional solutions.

SECTION 02

INDOOR SPORTS LIGHTING

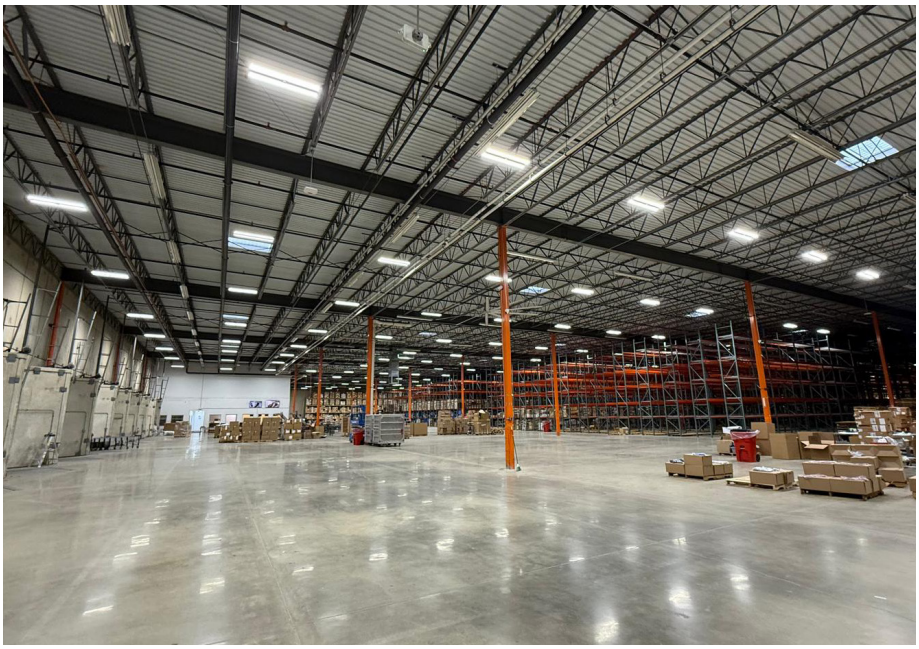

5 YEAR WARRANTY

FORGE X

POWER, AMPLIFIED

Next-generation LED high bay lighting system engineered for superior efficiency, refined optical control, and extended operational reliability. Designed for facilities seeking higher performance and reduced total cost of ownership.

- **Next-generation** high-efficacy LED platform
- **Enhanced optical control** for improved uniformity and glare free
- **Advanced thermal management** supporting extended service life
- **Flicker-free** performance for indoor sports and video recording
- **Optimized for medium- to high-mounting** height installations

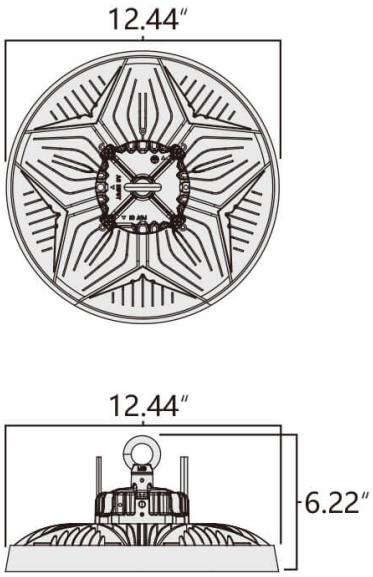

LID (120° / 90°)

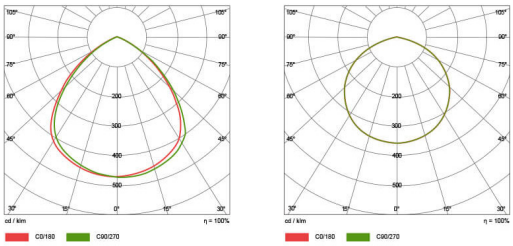

COLOR OPTIONS

WHITE	BLACK	GREY

KEY FEATURES

OPTICS

Aluminum reflector. Reduce energy use by up to 80% using our daylight and motion sensors.

DIFFUSER

IK08 tempered glass, comes standard with clear tempered glass, optional frosted tempered glass.

DRIVER

Class I Meanwell HBG / HVG, 1-10V Dimming optional.

HOUSING

Durable, rugged die cast aluminum design ensuring the perfect heat displacement. Powder coated inside and out.

MOUNTING

Comes standard with hook for chain/ cable mount. Optional U-Bracket mount available. Custom options can be made.

SMART CONTROL

Zigbee / Dali available. Reduce energy use by up to 80% using our daylight and motion sensors.

BEAM ANGLE

120° / 90° angle options

REPLACEMENT

100W LED = 250W HID / MH / HPS
150W LED = 400W HID / MH / HPS
200W LED = 500W HID / MH / HPS

ELECTRIC SYSTEM

Class I system
Total harmonic distortion: <20%
Power Factor: >0.9

Std. Input Voltage:
100-277VAC, 50/60Hz

Opt. High Voltage:
277-480VAC, 50/60Hz

IP65

MODEL NUMBER	DV-AIOHBL100N	DV-AIOHBL150N	DV-AIOHBL200N
SYSTEM WATTAGE	100W	150W	200W
LPW	130-140LM/W		
LUMEN OUTPUT @5K	13,000LM	19,500LM	26,000LM
LED LIGHT SOURCE	OSRAM		
DRIVER	INVENTRONICS		
CRI	70 / 80 / 90		
OPERATING TEMP	-104°F to 122°F		
IP RATING	IP65		
SURGE PROTECTOR	10kV / 20kV		
LIFE TIME	50,000 hours		
CCT	3,000K-6,500K		
WEIGHT	6.614 lbs	6.614 lbs	6.614 lbs

Specifications reflect standard models. Custom options may vary.
Contact Duvon™ lighting for additional solutions.

FORGE

POWER, SIMPLIFIED

Industrial-grade LED high bay lighting solution for warehouses, manufacturing facilities, and indoor sports venues. Designed for efficiency, durability, and consistent performance in demanding indoor environments.

- **High-efficacy** solid-state LED system
- **Wide optical distributions** for large indoor spaces
- **Advanced thermal management** for long service life
- **Instant on/off** operation with no restrike delay
- **Suitable for high-mounting** height application

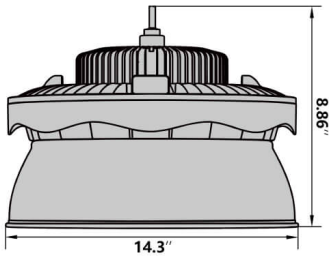

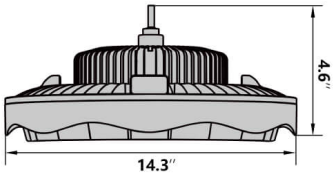

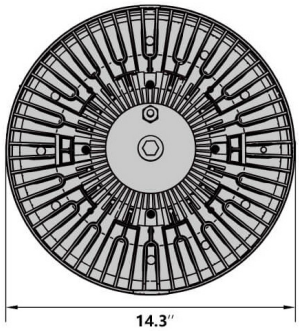

LID (120° / 90°)

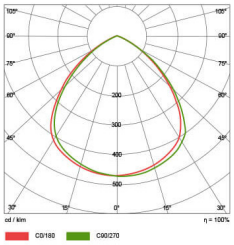

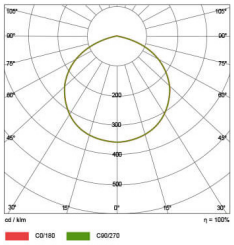

COLOR OPTIONS

WHITE	BLACK	GREY

KEY FEATURES

OPTICS

120° and 90° as an option with aluminum reflector. Reduce energy use by up to 80% using our daylight and motion sensors.

DIFFUSER

IK08 tempered glass, comes standard with clear tempered glass, optional frosted tempered glass.

DRIVER

Class I Meanwell HBG / HVG, 1-10V Dimming optional.

HOUSING

Durable, rugged die cast aluminum design ensuring the perfect heat displacement. Powder coated inside and out.

MOUNTING

Comes standard with hook for chain/cable mount. Optional U-Bracket mount available. Custom options can be made.

SMART CONTROL

Zigbee / Dali available. Reduce energy use by up to 80% using our daylight and motion sensors.

BEAM ANGLES

120° / 90° angle options

REPLACEMENT

100W LED = 250W HID / MH / HPS
120W LED = 300W HID / MH / HPS
150W LED = 400W HID / MH / HPS
200W LED = 500W HID / MH / HPS

ELECTRIC SYSTEM

Class I system
Total harmonic distortion: <20%
Power Factor: >0.9

Std. Input Voltage:
100-277VAC, 50/60Hz

Opt. High Voltage:
277-480VAC, 50/60Hz

IP65

MODEL NUMBER	DV-HBL100N	DV-HBL120N	DV-HBL150N	DV-HBL200N
SYSTEM WATTAGE	100W	120W	150W	200W
LPW	130-140LM/W			
LUMEN OUTPUT @5K	13,000LM	15,600LM	19,500LM	26,000LM
LED LIGHT SOURCE	OSRAM			
DRIVER	INVENTRONICS			
CRI	70 / 80 / 90			
OPERATING TEMP	-104°F to 122°F			
IP RATING	IP65			
SURGE PROTECTOR	10kV / 20kV			
LIFE TIME	50,000 hours			
CCT	2,700K-7,000K			
WEIGHT	11.8 lbs	12.1 lbs	12.87 lbs	14.74 lbs

Specifications reflect standard models. Custom options may vary.
Contact Duvon™ lighting for additional solutions.

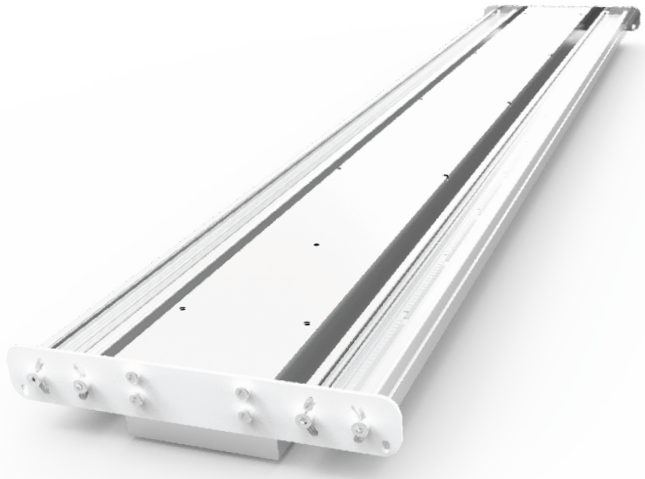

ATLAS

UNIFORM BY DESIGN

Linear LED lighting system designed for warehouses, production facilities, commercial interiors, and indoor sports applications. Delivers uniform illumination with clean integration into modern architectural environments.

- **Continuous, uniform** light distribution
- **High efficiency** with controlled glare
- **Multiple mounting and layout** configurations
- **Durable industrial-grade** design
- **Long service life** with minimal maintenance

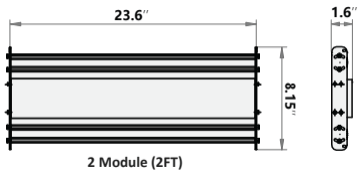

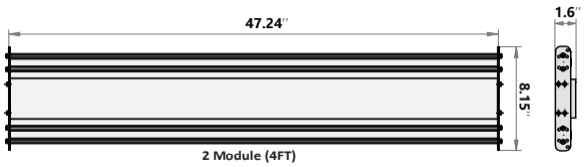

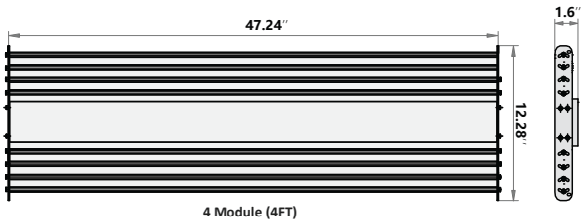

LID (120° / 90°)

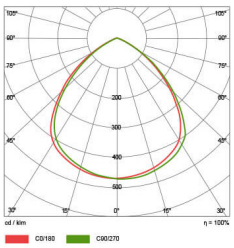

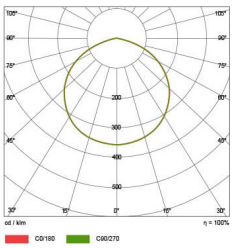

COLOR OPTIONS

WHITE | BLACK | GREY

KEY FEATURES

OPTICS

Asymmetrical and wide.
120° beam angle optional.

DIFFUSER

IK08 tempered glass, comes standard with clear tempered glass, optional frosted tempered glass.

DRIVER

Class I Meanwell HBG / HVG, 1-10V Dimming optional.

HOUSING

Durable, rugged die cast aluminum design ensuring the perfect heat displacement.

MOUNTING

Pendant or hook for chain/cable mounting. Custom options can be made upon request.

SMART CONTROL

Zigbee / Dali available. Reduce energy costs by using our daylight and motion sensors.

BEAM ANGLES

Asymmetric / 120° angle options

REPLACEMENT

70W LED = 200W HID / MH / HPS
100W LED = 250W HID / MH / HPS
150W LED = 400W HID / MH / HPS
180W LED = 500W HID / MH / HPS
200W LED = 500W HID / MH / HPS
240W LED = 800W HID / MH / HPS
300W LED = 1000W HID / MH / HPS
400W LED = 1000W HID / MH / HPS

ELECTRIC SYSTEM

Class I system
Total harmonic distortion: <20%
Power Factor: >0.9

Std. Input Voltage:
100-277VAC, 50/60Hz

Opt. High Voltage:
277-480VAC, 50/60Hz

IP65

MODEL NUMBER		DV-PHBL70N	DV-PHBL150N	DV-PHBL200N	DV-PHBL300N	DV-PHBL400N
SYSTEM WATTAGE		70W	150W	200W	300W	400W
LPW		130-140LM/W				
LUMEN OUTPUT @5K		9,800LM	21,000LM	28,000LM	42,000LM	56,000LM
LED LIGHT SOURCE		OSRAM				
DRIVER		INVENTRONICS				
CRI		70 / 80 / 90				
OPERATING TEMP		-104°F to 122°F				
IP RATING		IP20 / IP65				
SURGE PROTECTOR		10kV / 20kV				
LIFE TIME		50,000 hours				
CCT		2,700K-7,000K				
WEIGHT	2FT MODULE 4FT MODULE	7.7 lbs 12.76 lbs	8.58 lbs 13.2 lbs	9 lbs 13.86 lbs	16.28 lbs (4FT)	34.1 lbs (4FT)

Specifications reflect standard models. Custom options may vary.
Contact Duvon™ lighting for additional solutions.

SECTION 03

AREA
LIGHTING

LANDMARK

DESIGNED TO BELONG

Flexible LED area lighting solution for campuses, parking areas, roadways, and public environments. Designed to provide visual comfort, durability, and reliable outdoor performance.

- **High-efficacy** solid-state LED system
- **Wide optical distributions** for large indoor spaces
- **Advanced thermal management** for long service life
- **Instant on/off** operation with no re-strike delay
- **Suitable for high-mounting** height application

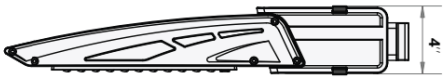

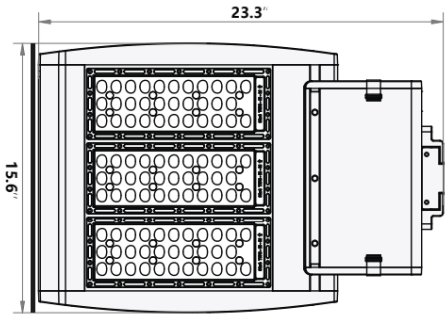

LID (120° / 90°)

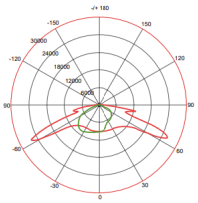

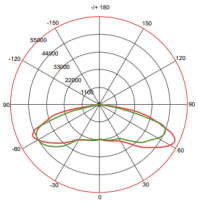

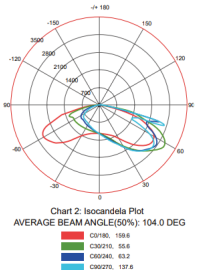

COLOR OPTIONS

WHITE | BLACK | GREY

KEY FEATURES

OPTICS

120° and 90° as an option with aluminum reflector.

DIFFUSER

IK08 tempered glass, comes standard with clear tempered glass, optional frosted tempered glass.

DRIVER

Class I Meanwell HBG / HVG, 1-10V Dimming optional.

HOUSING

Durable, rugged die cast aluminum design ensuring the perfect heat displacement. Powder coated inside and out.

MOUNTING

Comes standard with hook for chain/cable mount. Optional U-Bracket mount available. Custom options can be made.

SMART CONTROL

Zigbee / Dali available. Reduce energy use by up to 80% using our daylight and motion sensors.

BEAM ANGLES

120° / 90° angle options

REPLACEMENT

70W LED = 175W HID / MH / HPS
100W LED = 250W HID / MH / HPS
150W LED = 400W HID / MH / HPS
200W LED = 500W HID / MH / HPS
240W LED = 600W HID / MH / HPS
300W LED = 800W HID / MH / HPS

ELECTRIC SYSTEM

Class I system
Total harmonic distortion: <20%
Power Factor: >0.9

Std. Input Voltage:
100-277VAC, 50/60Hz

Opt. High Voltage:
277-480VAC, 50/60Hz

IP65

MODEL NUMBER	DV-LAL70N	DV-LAL100N	DV-LAL150N	DV-LAL200N	DV-LAL240N	DV-LAL300N
SYSTEM WATTAGE	70W	100W	150W	200W	240W	300W
LPW	140LM/W					
LUMEN OUTPUT @5K	9,800LM	21,000LM	28,000LM	42,000LM	42,000LM	56,000LM
LED LIGHT SOURCE	OSRAM					
DRIVER	INVENTRONICS					
CRI	70 / 80 / 90					
OPERATING TEMP	-104°F to 122°F					
IP RATING	IP20 / IP65					
SURGE PROTECTOR	10kV / 20kV					
LIFE TIME	50,000 hours					
CCT	2,700K-7,000K					
WEIGHT	22.66 lbs	23.4 lbs	24.97 lbs	25.63 lbs	27 lbs	28.27 lbs

Specifications reflect standard models. Custom options may vary.
Contact Duvon™ lighting for additional solutions.

Smarter. Brighter. Stronger.

Duvon™ designs and manufactures complete LED lighting systems engineered for performance, long-term reliability, and simplified service.

Phone: (224) 567-8312
Email: sales@duvonlighting.com
Add: 710 Armstrong Dr, Buffalo Grove, IL 60089

Specifications subject to site conditions and engineering requirements. Additional wattage configurations available upon request. Specifications represent our standard configuration; customization is available. Full spec sheets provided separately.