DUVON™

Operating Instructions
Precision Lighting System

UNION | FIELD SERIES



Contact us or visit www.duvonlighting.com
Phone: (224) 567-8312
Email: sales@duvonlighting.com
500 Tower Pkwy, Lincolnshire, IL 60069

ELECTRICIANS MUST READ PRIOR TO INSTALLATION



- WARNING: RISK OF ELECTRIC SHOCK

- Product must be installed by licensed electrician.
- Product designed for Industrial purpose only.
- Disconnect or turn off power before and during installation.
- Verify that supply voltage is same as rated luminaire voltage.



- WARNING: RISK OF ELECTRIC INJURY

- Wear gloves and safety glasses at all times whilst handling the luminaire.
- Avoid direct eye exposure to the light source while it is on.



- WARNING: RISK OF BURN

- Avoid touching any extrenal surface of the luminaire when in use.
- Allow the luminaire to cool before handling.
- Follow all manufacturer's warnings,recommendations and restrictions.



- CAUTION: RISK OF FIRE

- Keep combustible materials away from luminaire.
- Do not operate in close proximity to persons, combustible materials or substances affected by heat.
- Building insulation must not cover this luminaire.



- CAUTION: RISK OF PRODUCT DAMAGE

- Remove protective film on reflector lens and luminaire.
- If the external flexible cable or plug of the luminaire isdamaged, return to manufacturer for repair or replacement.
- Ensure the product is not exposed to heat, chemicals or sharp objects.
- If the product is damaged, contact the supplier for maintenance or replacement to avoid hazards.
- Do not mount or support luminaire in a manner that can cut the outer sheath or damage wire insulation.
- Only use the luminaire in its intended location.



- ELECTROSTATIC DISCHARGE (ESD):

- ESD can damage LED fixtures. Personal grounding equipment must be worn during.

★ DISCLAIMERS

This product must be installed and used as per these instructions
This product is not suitable for installation in hazardous and/or corrosive areas
This product has been designed to operate in ambient temperatures: -30℃ to 50℃

INSTALLATION INSTRUCTIONS

★ (NO CONNECTOR / REMOTE DRIVE)

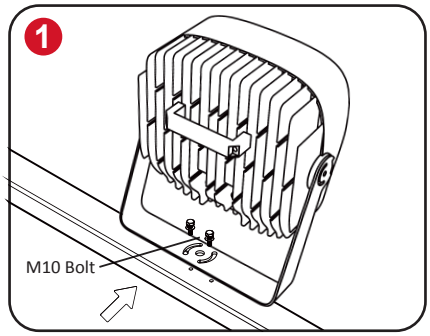

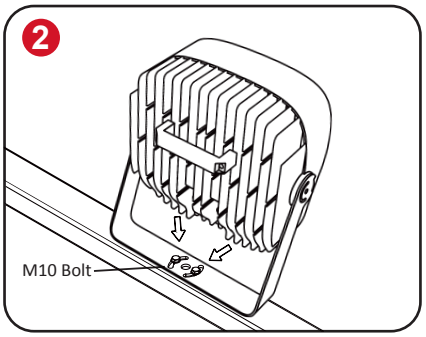

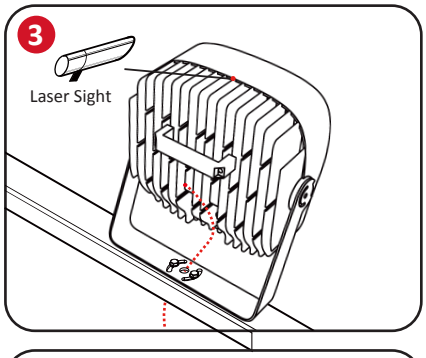

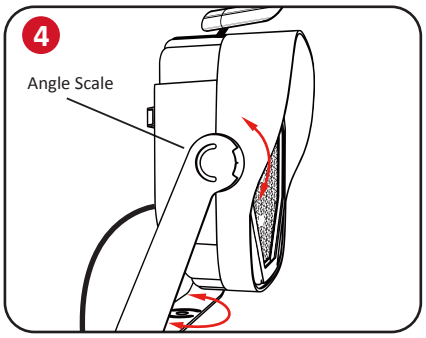

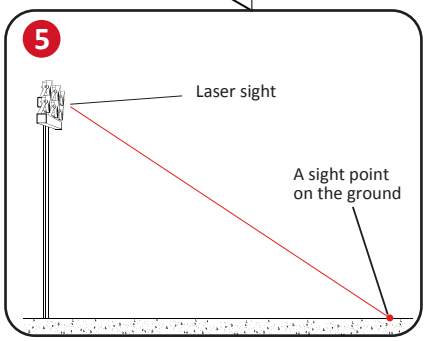

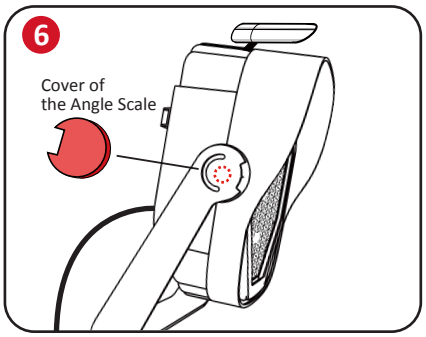

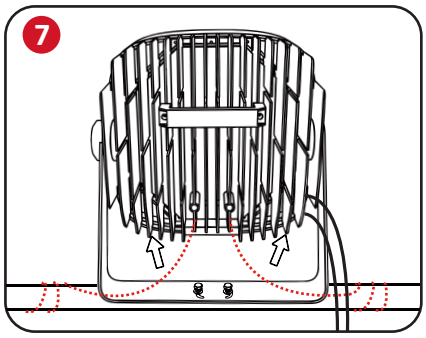

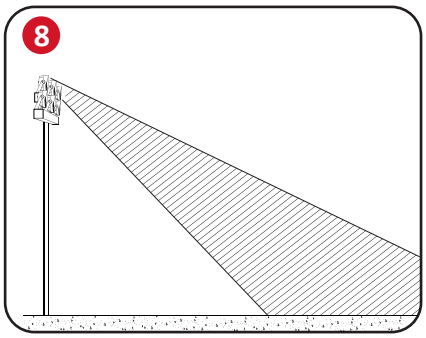

STEP 1:
Fix the rotatable bracket on the M10 bolt.
See 1.

STEP 2:
fix the light on the mounting surface.
(Note: do not tighten the screws) See 2.

STEP 3:
The laser sight is attached to the light fixture.
See 3.

STEP 4:
Adjust the Angle of the lamp to make
the laser hit the corresponding ground point.
Then tighten the screws. See 4 5.

STEP 5:
Fix the Angle connection screw and
install the regulator cover.
See 6.

STEP 6:
attach the safety cord to the light fixture.
See 7.

STEP 7:
pen the switch to verify the actual effect.
See 8.

INSTALLATION INSTRUCTIONS

★ (NO CONNECTOR / REMOTE DRIVE)

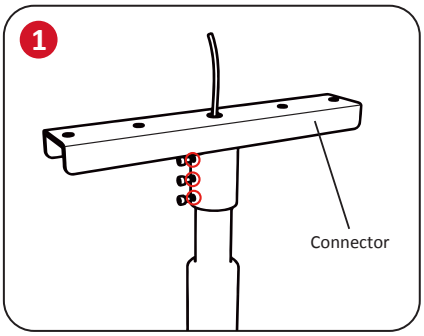

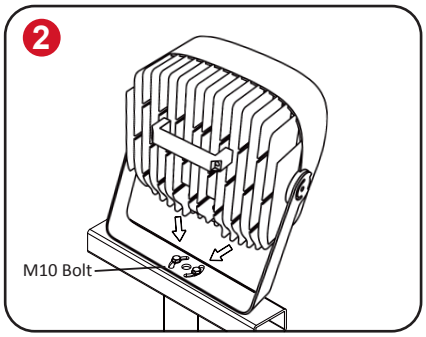

STEP 1:
Wire goes through the adapter, then install
the adapter on the lamp post.
See 1.

STEP 2:
Install the light fixture on the adapter head.
See 2.

STEP 3:
refer to step 3 above.

DRIVER BOX INSTALLATION - FIRST OPTION

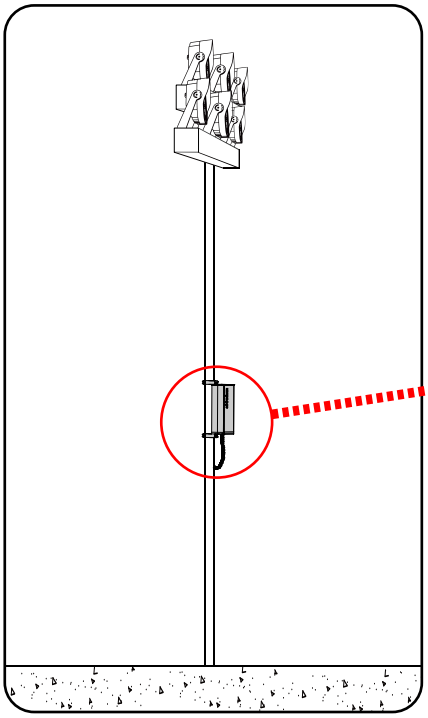

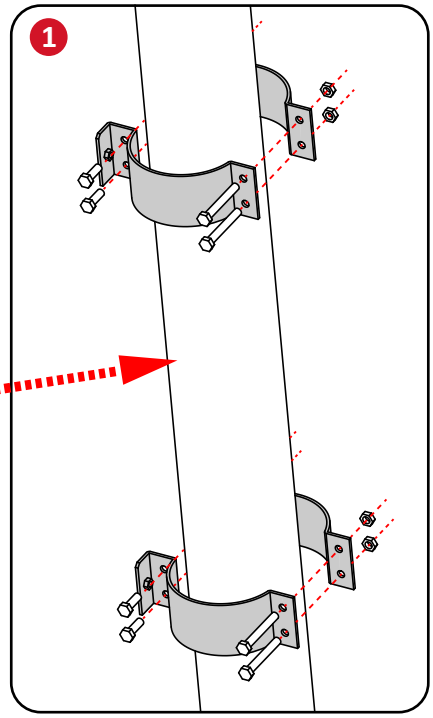

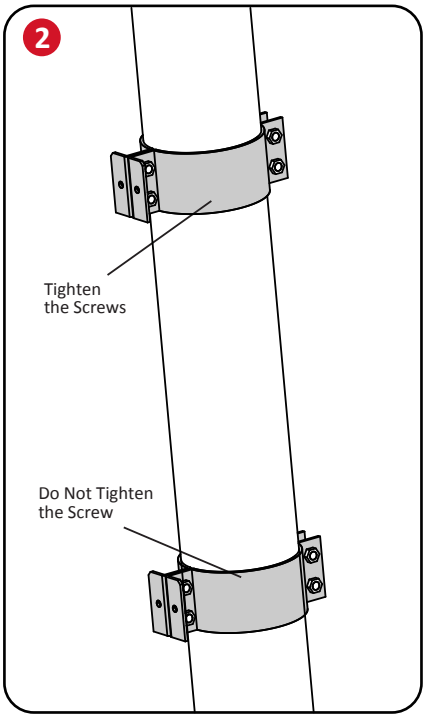

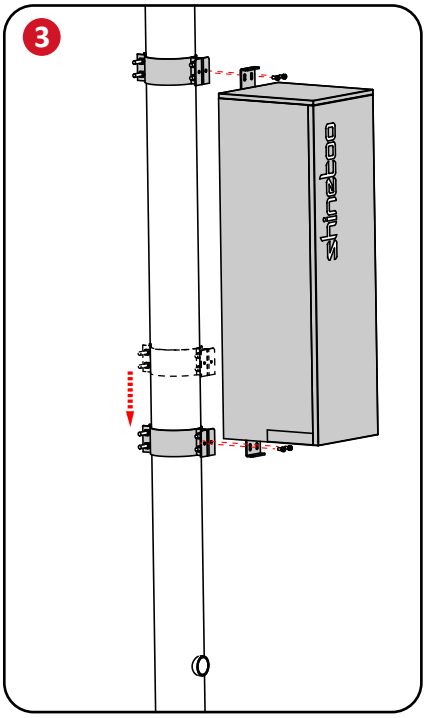

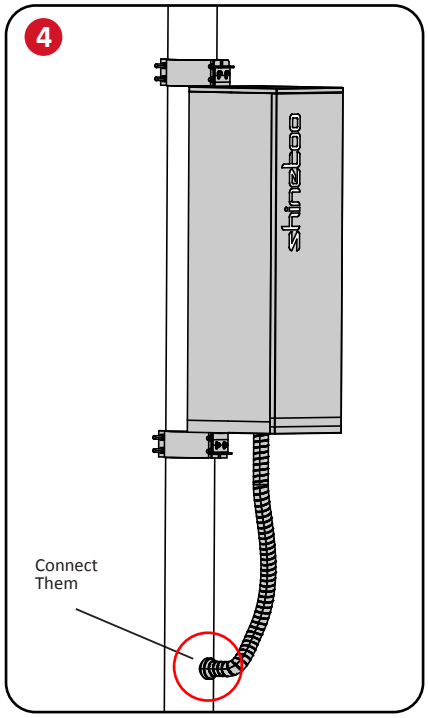

STEP 1:
Fix the upper accessories on the light pole with your hands, as shown in the picture. See 1.

STEP 2:
After fitting properly, tighten the screw, and install the lower part of the screw as the upper part . See 2.
(note: do not tighten the lower part of the screw)

STEP 3:
Place the driver box at the interface end of the accessories. First fix the driver box and the accessories at the upper end and tighten the screws.Then adjust the position of the lower part of the accessories. When corresponding to the position of the driver box, fix the lower part of the power box on the top and tighten the screws. See 3.

STEP 4:
Connect the driver cord to the lamp cord. See 4 .

DRIVER BOX INSTALLATION - SECOND OPTION

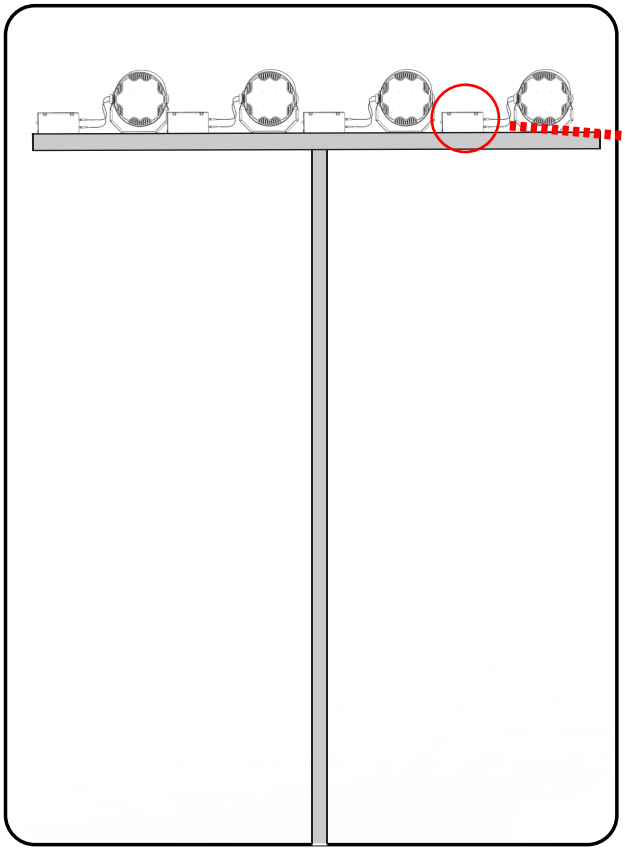

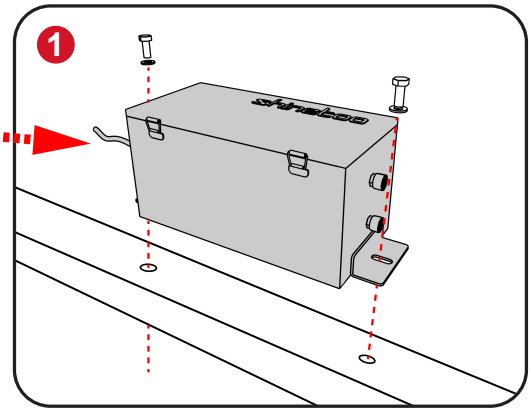

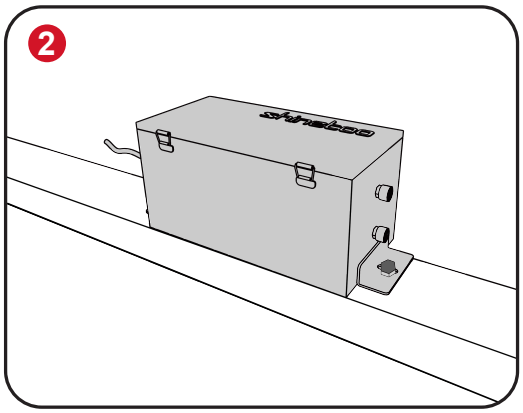

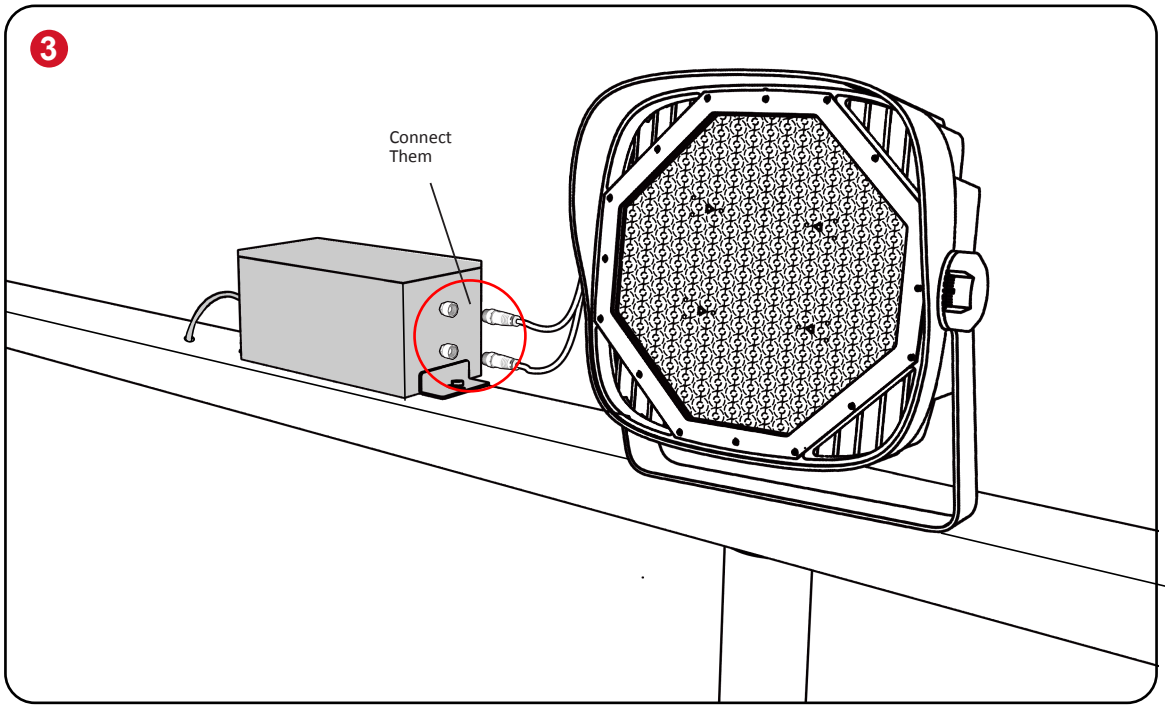

STEP 1:
Place the driver box on the light pole and tighten the screws. See 1 2.

STEP 2:
Connect the lamp cable to the driver box. See 3.

DRIVER BOX INSTALLATION - FIRST OPTION

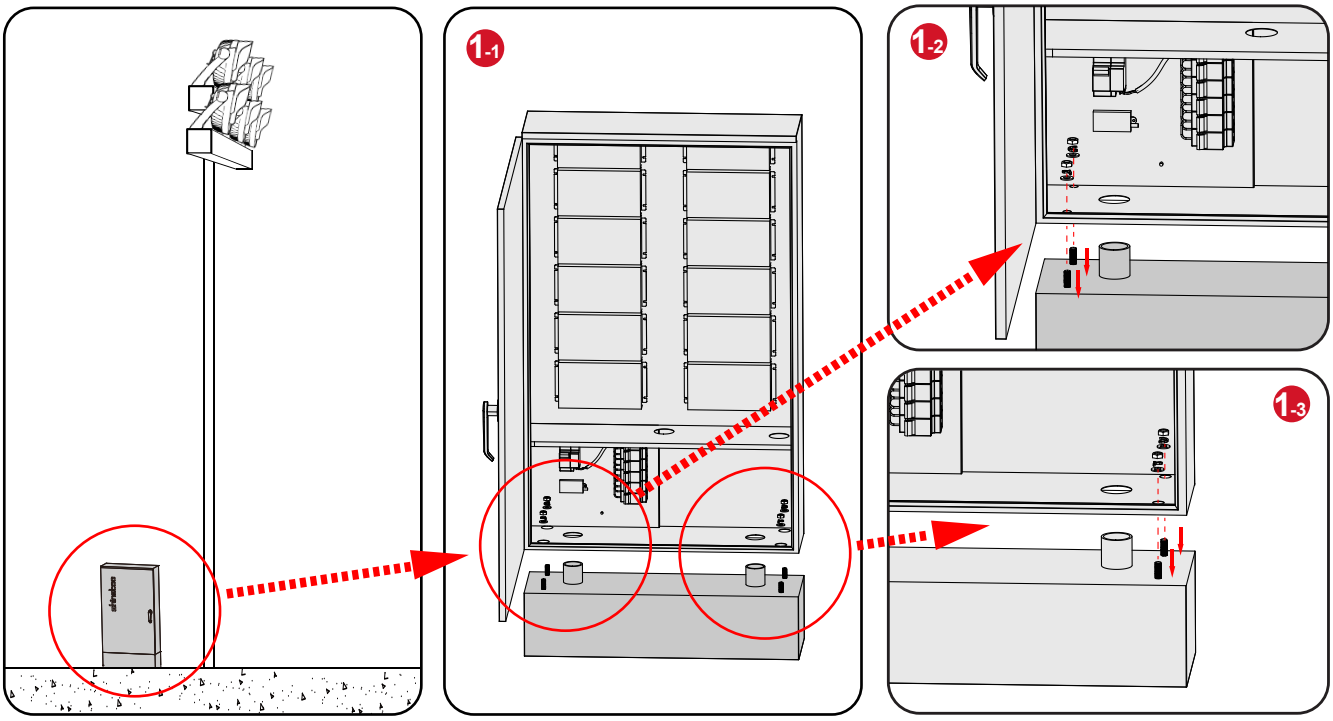

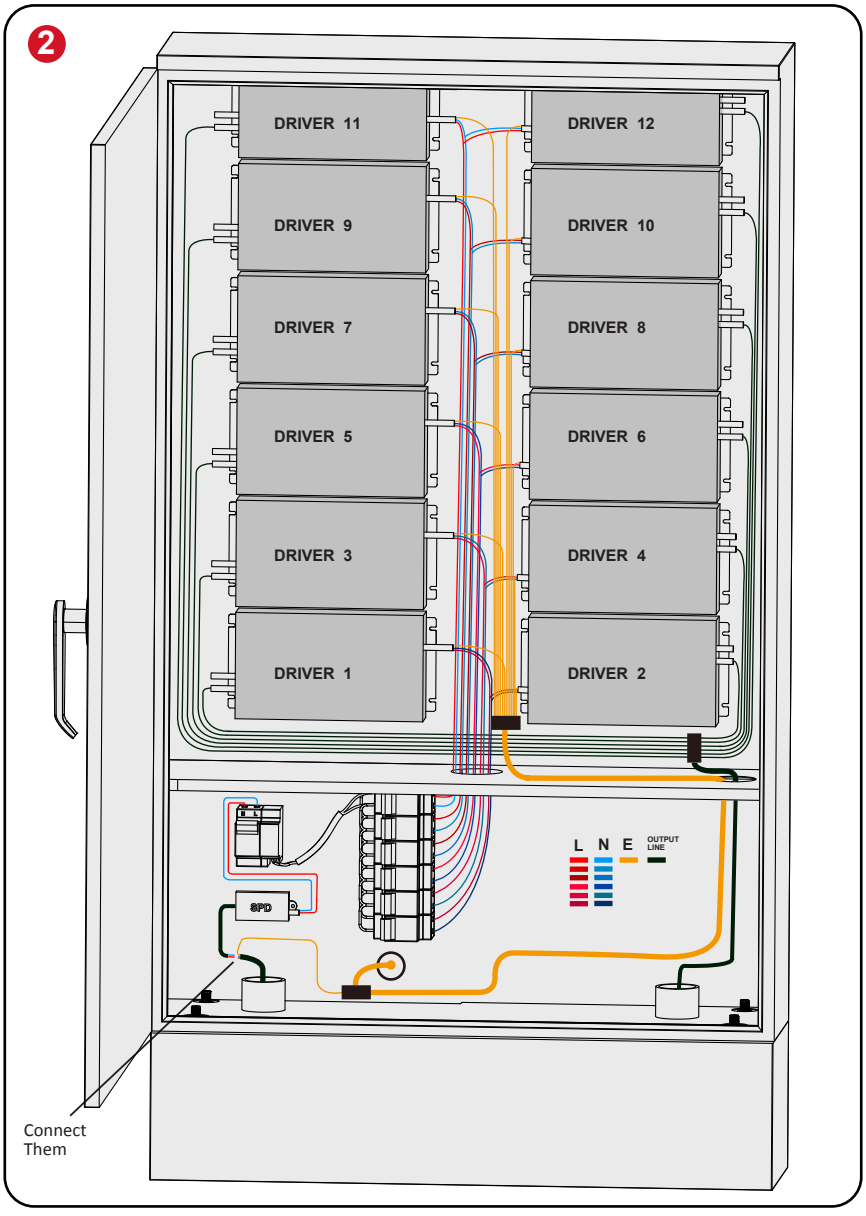

STEP 1:
First hammer the nails into the cement, then place the driver box on the concrete board and screw it in place. See 1-1 1-2 1-3.

STEP 2:
Connect the lines according to the styles provided in figure 2.
(note: do not tighten the lower part of the screw) See 2.