# UNION™ SERIES

## MUNICIPAL & RECREATIONAL SPORTS FIELD LIGHTING SYSTEM

DESIGNED IN ACCORDANCE WITH ANSI/IES RP-6

*Designed for sports field applications.*

| PROJECT SUBMITTAL | |
|---|---|
| PROJECT NAME | |
| TYPE / DESIGNATION | |
| CATALOG NUMBER | |
| SUBMITTED BY | DATE |
| NOTES / REMARKS | |

## 300W | 400W | 500W | 600W

SYSTEM CONFIGURATIONS



**ETL LISTED • DLC PREMIUM • IP65 • BAA COMPLIANT**

### SYSTEM ENGINEERING

Lighting system performance is achieved through compact forward-throw reflector optics optimized for mid-height installations, with controlled beam distribution and aiming geometry tailored for consistent field coverage.

### KEY SYSTEM ATTRIBUTES

- High-output sports lighting luminaire
- Forward-throw optical distribution
- SVS™ glare and spill-light control system
- Integrated driver configuration
- Die-cast aluminum housing for outdoor use


© 2026 DUVON LIGHTING LLC. ALL RIGHTS RESERVED.

# SYSTEM OVERVIEW & PERFORMANCE SUMMARY

## SYSTEM OVERVIEW

The Union™ Series is an LED sports field lighting system engineered for municipal athletic fields, school sports facilities, and community recreation complexes.

Union™ represents a value-engineered platform derived from the Liberty™ stadium lighting system, optimized for recreational and school-level sports lighting projects requiring reliable illumination performance with simplified installation and economical system cost.

The luminaire combines efficient LED performance, forward-throw optical distributions, and durable outdoor construction to deliver consistent illumination across athletic playing surfaces while helping control glare and off-site light spill.

Lighting systems utilizing Union luminaires are developed in accordance with ANSI/IES RP-6 recommendations. Illumination levels, uniformity, and aiming geometry shall be verified through project-specific photometric calculations.

Project-specific photometric simulations verify illumination levels, fixture aiming angles, and illumination uniformity prior to installation.

LIGHTING PERFORMANCE IS ACHIEVED THROUGH SYSTEM-LEVEL COORDINATION—NOT FIXTURE OUTPUT ALONE.

Duvon sports lighting systems are designed as integrated lighting systems rather than individual luminaires.

## SYSTEM PERFORMANCE SUMMARY

| ATTRIBUTE | PERFORMANCE |
|---|---|
| **Typical System Efficacy** | 140 lm/W (system-level, dependent on configuration) |
| **Rated Life** | L70 ≥ 100,000 hours |
| **Ingress Protection** | IP65 |
| **Surge Protection** | 10 kV (std) / 20 kV (opt) |
| **Operating Temperature** | -40°F to +131°F |

# APPLICATIONS & DESIGN SUPPORT

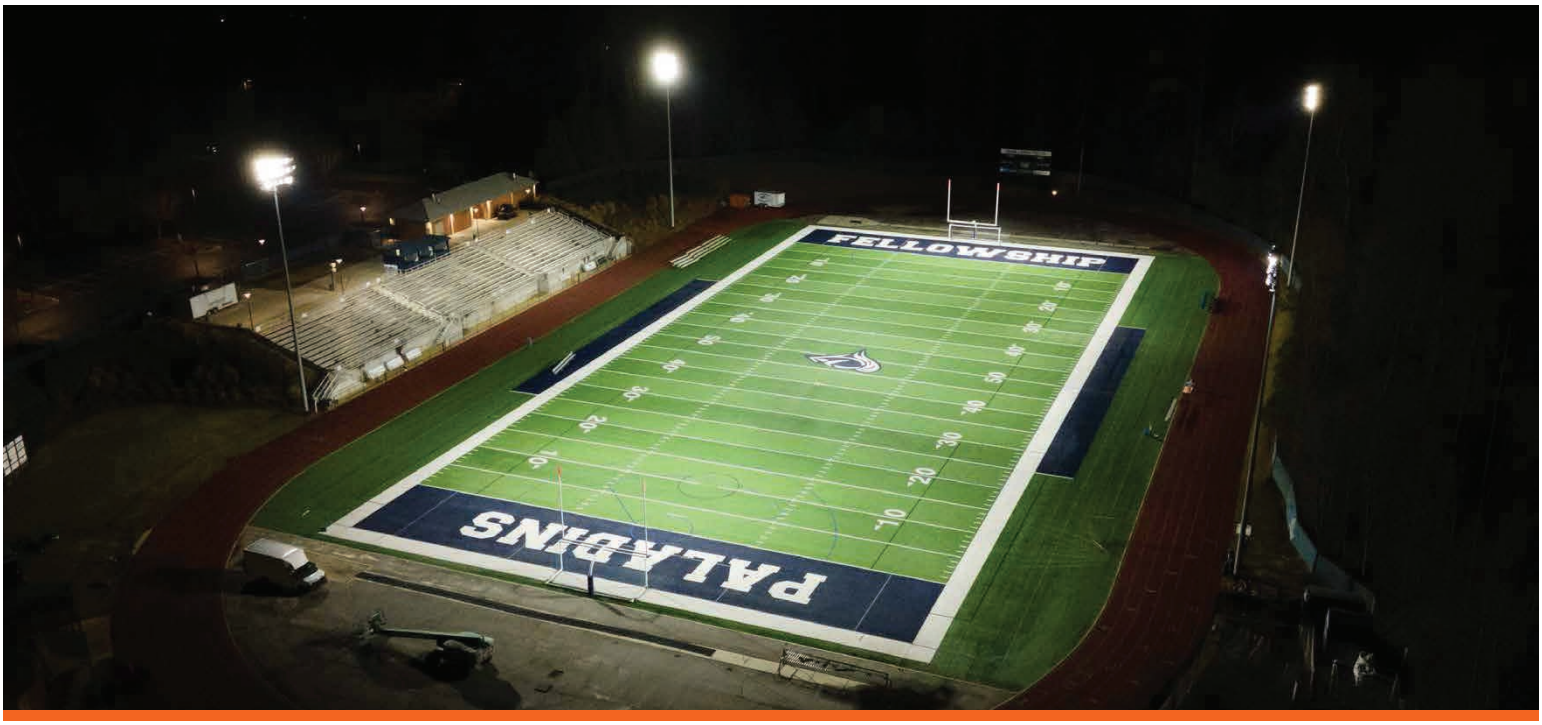


## PRIMARY APPLICATIONS

**SPORTS FACILITIES**
Municipal football fields, school athletic fields, soccer complexes, baseball and softball facilities, multi-sport recreation fields.

**COMMUNITY INFRASTRUCTURE**
Public recreation complexes, park sports facilities, training fields.

### TYPICAL MOUNTING CONDITIONS

**Typical pole heights: 50–70 ft.** Final mounting height, pole spacing, fixture quantity, and aiming angles shall be determined through project-specific photometric analysis.

## ENGINEERING & DESIGN SUPPORT

Duvon provides lighting system design assistance including luminaire selection, optical configuration, and photometric verification.

Duvon engineering services include:

- AGi32 photometric simulations
- Pole placement recommendations
- Fixture aiming schedules
- Glare analysis
- Spill-light evaluation
- Structural loading review

These services assist architects, engineers, and municipalities in lighting design verification.

# LIGHTING PERFORMANCE

## REFERENCE STANDARD

Lighting designs utilizing Union luminaires are developed in accordance with ANSI/IES RP-6.

| SPORT APPLICATION | AVG ILLUMINANCE | AVG:MIN | MAX:MIN | IES CLASS |
|---|---|---|---|---|
| **Recreational Practice Fields** | 10–20 fc | ≤3.0:1 | ≤4.0:1 | Class IV |
| **Recreational Soccer / Football** | 20–30 fc | ≤2.5:1 | ≤3.0:1 | Class III |
| **School Football** | 30–40 fc | ≤2.0:1 | ≤2.5:1 | Class II |
| **Baseball / Softball Practice** | Infield 30 fc / Outfield 20 fc | ≤3.0:1 | ≤4.0:1 | Class IV |
| **Baseball / Softball Recreational** | Infield 50 fc / Outfield 30 fc | ≤2.5:1 | ≤3.0:1 | Class III |
| **Baseball / Softball Competitive** | Infield 70 fc / Outfield 50 fc | ≤2.0:1 | ≤2.5:1 | Class II |

Actual lighting performance depends on field dimensions, pole height, fixture placement, and optical selection.
Illumination and uniformity values represent design targets and shall be verified through project-specific photometric calculations.

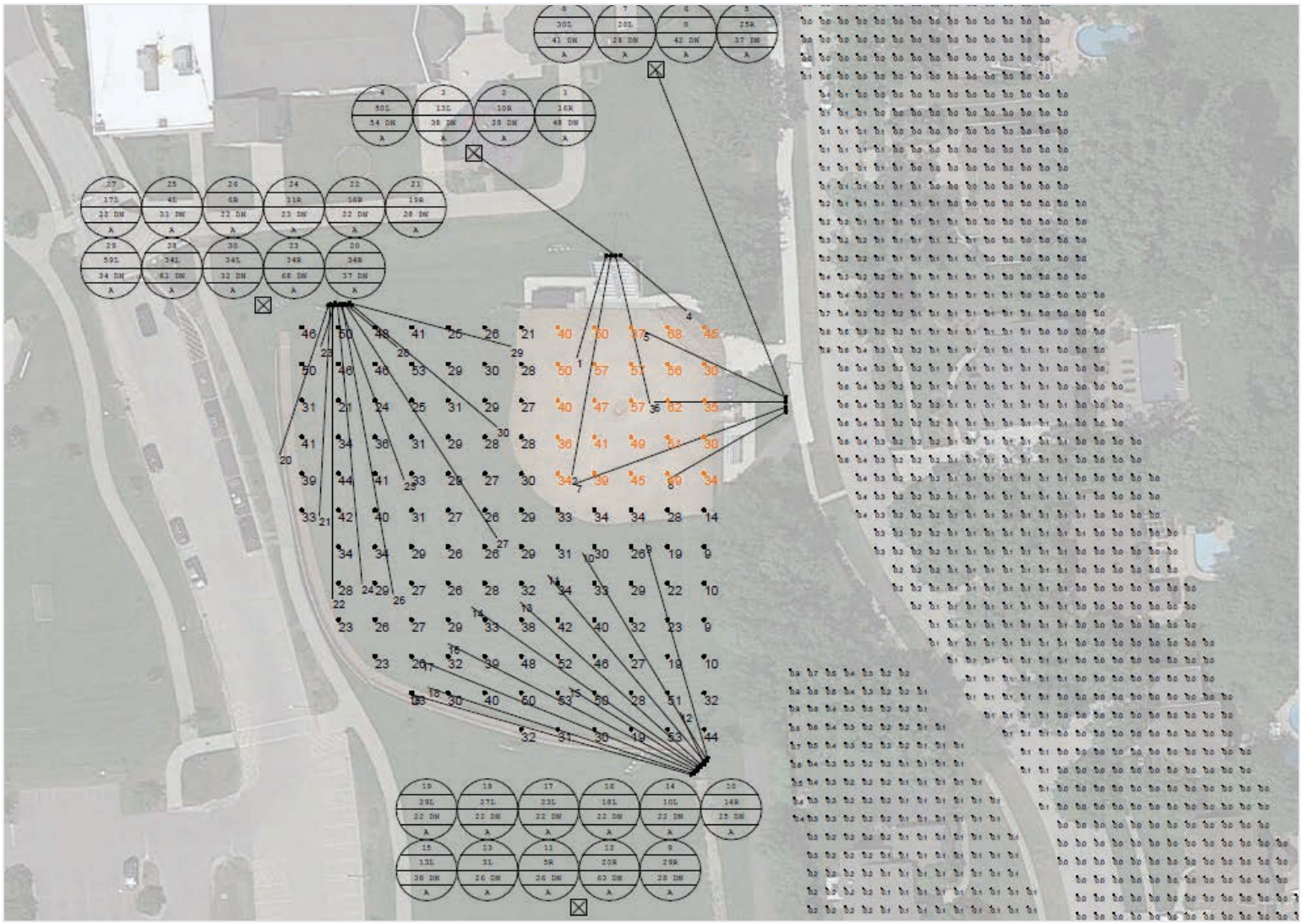

*Sample photometric calculation — Baseball, 240ft, 4(65ft), Class III*

# OPTICAL DISTRIBUTIONS

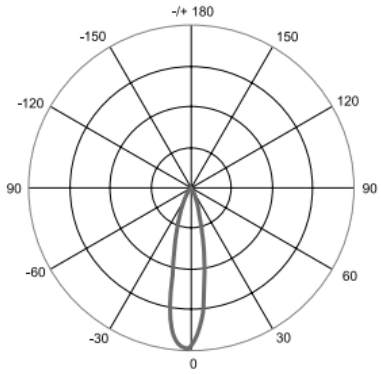


**TYPE A (25°)**

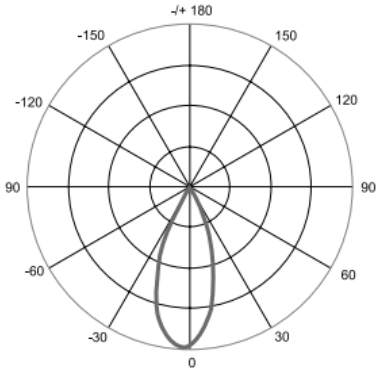


**TYPE B (45°)**

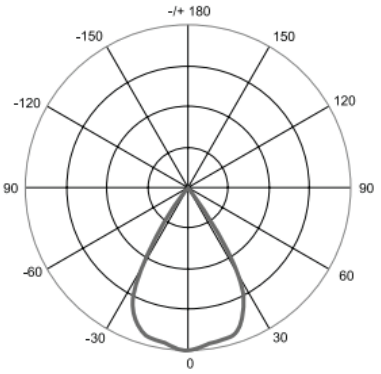


**TYPE C (60°)**

| OPTICAL TYPE | BEAM ANGLE | TYPICAL APPLICATION |
|---|---|---|
| **TYPE A** | 25° | Primary field coverage |
| **TYPE B** | 45° | Mid-field illumination |
| **TYPE C** | 60° | Sideline / perimeter fill lighting |

### OPTICAL DESIGN

Forward-throw reflector optics direct illumination onto the playing surface while limiting high-angle light and spill light beyond the facility boundary.

- SVS™ visor reduces glare and spill light toward surrounding areas
- Multiple optical distributions support project-specific field coverage and aiming



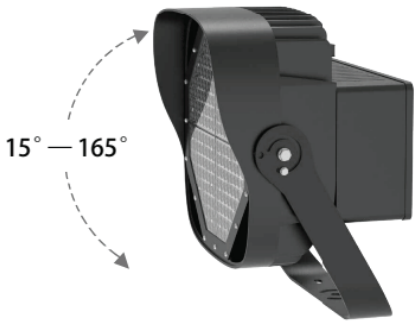

# ELECTRICAL & MECHANICAL SPECIFICATIONS

## LUMEN OUTPUT

| MODEL | WATTS | LUMEN OUTPUT |
|---|---|---|
| UNION-300 | 300 W | 42,000 lm |
| UNION-400 | 400 W | 56,000 lm |
| UNION-500 | 500 W | 70,000 lm |
| UNION-600 | 600 W | 84,000 lm |

## TYPICAL SYSTEM EFFICACY

**140 lm/W**

Depending on wattage, CCT, and driver configuration.

## INPUT CURRENT (AMPERAGE)

| VOLTAGE | 300W | 400W | 500W | 600W |
|---|---|---|---|---|
| 120V | 2.50 A | 3.33 A | 4.17 A | 5.00 A |
| 208V | 1.44 A | 1.92 A | 2.40 A | 2.88 A |
| 240V | 1.25 A | 1.67 A | 2.08 A | 2.50 A |
| 277V | 1.08 A | 1.44 A | 1.81 A | 2.17 A |
| 480V | 0.63 A | 0.83 A | 1.04 A | 1.25 A |

Input current values are nominal. Final branch circuit sizing shall be verified in accordance with NEC and project requirements.

## ELECTRICAL CHARACTERISTICS

| ATTRIBUTE | PERFORMANCE |
|---|---|
| Input Voltage | 100–277 V std. (277–480 V opt.) |
| Driver Type | Constant Current LED Driver |
| Driver Manufacturer | Inventronics |
| Surge Protection | 10 kV std. (20 kV opt.) |
| Dimming | 0–10 V compatible |
| LED Lifetime | L70 ≥ 100,000 hours |
| Operating Temperature | -40°F to +131°F |
| Ingress Protection | IP65 |

## MECHANICAL CONSTRUCTION

| COMPONENT | SPECIFICATION |
|---|---|
| Housing | Die-cast aluminum |
| Finish | Polyester powder coating |
| Hardware | Stainless steel external fastenersv |
| Mounting | Adjustable yoke bracket |
| Tilt Adjustment | 15°–165° |

## THERMAL MANAGEMENT

Die-cast aluminum heat sink with passive convection cooling designed to maintain LED junction temperature and long-term system performance.

## FIXTURE WEIGHT

| MODEL | WEIGHT-INT |
|---|---|
| UNION-300 | 30.5 lbs |
| UNION-400 | 33.7 lbs |
| UNION-600 | 36.6 lbs |

INT = integrated driver on back of fixture.

Fixture weight varies by wattage and configuration. Final values shall be confirmed in project-specific submittals.

## EFFECTIVE PROJECTED AREA (EPA)

0.52—1.30 ft²

**STRUCTURAL CONSIDERATIONS**

EPA values assist engineers evaluating pole wind loading and structural requirements. Final pole design shall be verified by a licensed structural engineer in accordance with applicable codes.

# SYSTEM CONTROLS

Union™ luminaires utilize integrated driver architecture.

### LIGHTING CONTROLS

Supports lighting control platforms including:
- Zigbee wireless lighting control
- Wireless DMX stadium control

Control capabilities:
- Remote on/off
- Scheduled operation
- Scene-based dimming
- Energy monitoring
- Dynamic lighting effects

**SYSTEM PERFORMANCE VERIFICATION**

Lighting systems may include project documentation such as photometric reports, pole layouts, aiming diagrams, IES files, electrical load data, and structural calculations.

# DIMENSIONAL DATA

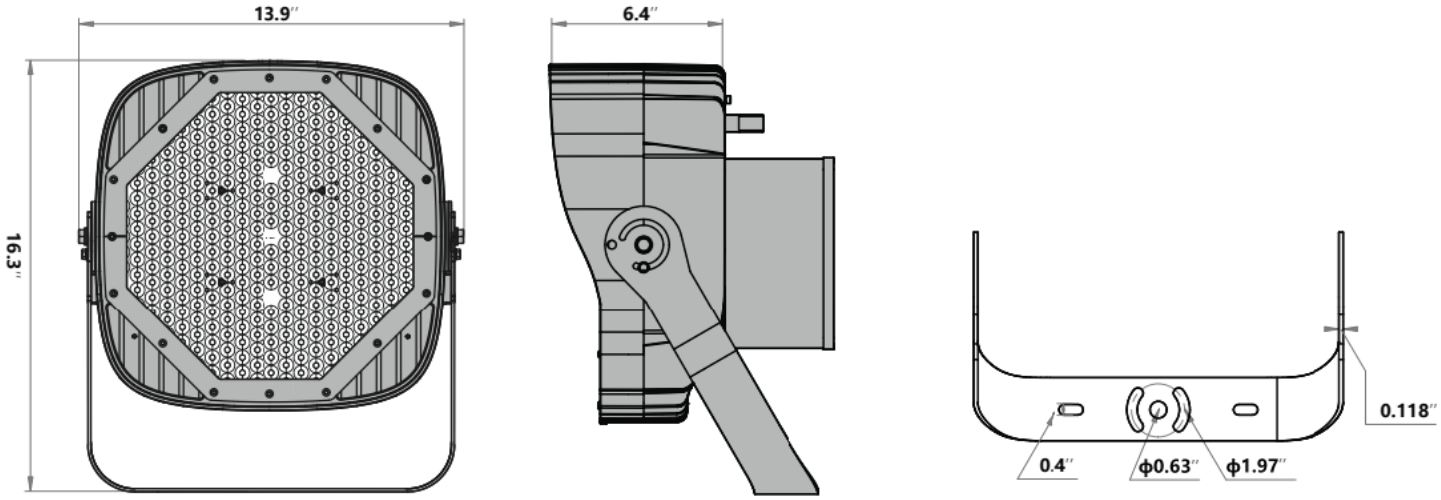

# ORDERING INFORMATION & SUBMITTAL SCHEDULE

## MODEL SELECTION BUILDER

| MODEL | WATTS | CCT | CRI | OPTIC | VOLTAGE | MOUNT | OPTIONS |
|---|---|---|---|---|---|---|---|
| UNION | 300<br>400<br>500<br>600 | 40K<br>50K<br>**57K** | **70**<br>80 | A<br>B<br>C | **STD**<br>HV | YK | SC |

Bold values indicate standard configuration.

**CATALOG NUMBER EXAMPLE** UNION-300-50K-70-B-STD-YK-SC

### CONFIGURATION CODES

**CCT**

40K = 4000K
50K = 5000K
57K = 5700K

**OPTICS**

A = 25°
B = 45°
C = 60°

**VOLTAGE**

STD = 120-208V
HV = 277-480V

**MOUNT**

YK = YOKE MOUNT

**OPTIONS**

SC = SMART CONTROL

### FIXTURE SCHEDULE

| TYPE | CATALOG NUMBER | QTY |
|---|---|---|
| | | |
| | | |
| | | |
| | | |
| | | |

Final configuration shall be verified against project-specific electrical and photometric requirements.


**DUVON LIGHTING LLC**

500 TOWER PKWY, LINCOLNSHIRE, IL 60069

**P: (224) 567-8312 E: SALES@DUVONLIGHTING.COM WWW.DUVONLIGHTING.COM**